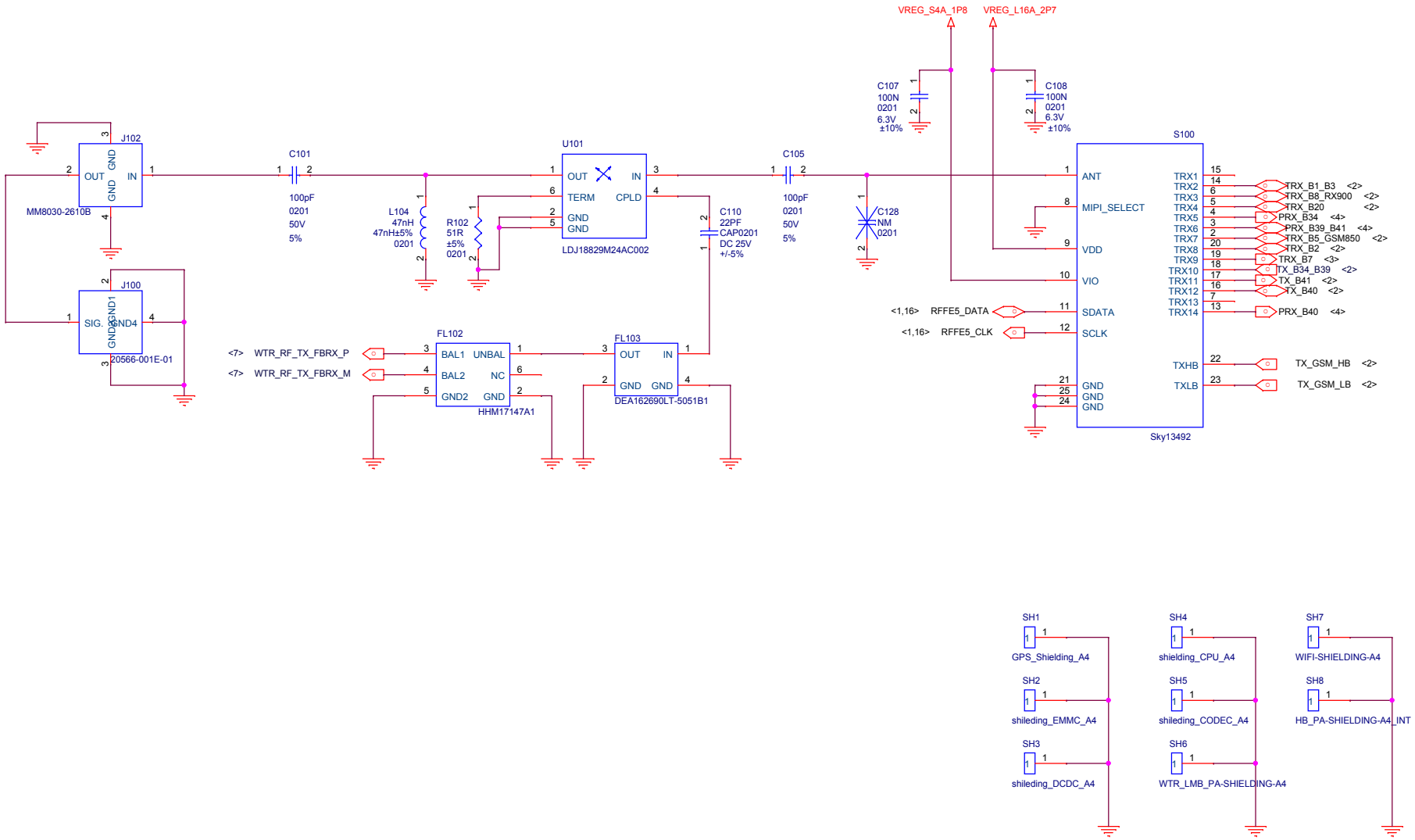

Ant Con&Coupler & Switchplexer

Title	A1	
Size A3	Document Number <Doc>	Rev P0
Date: Friday, July 15, 2016	Sheet 1 of 36	

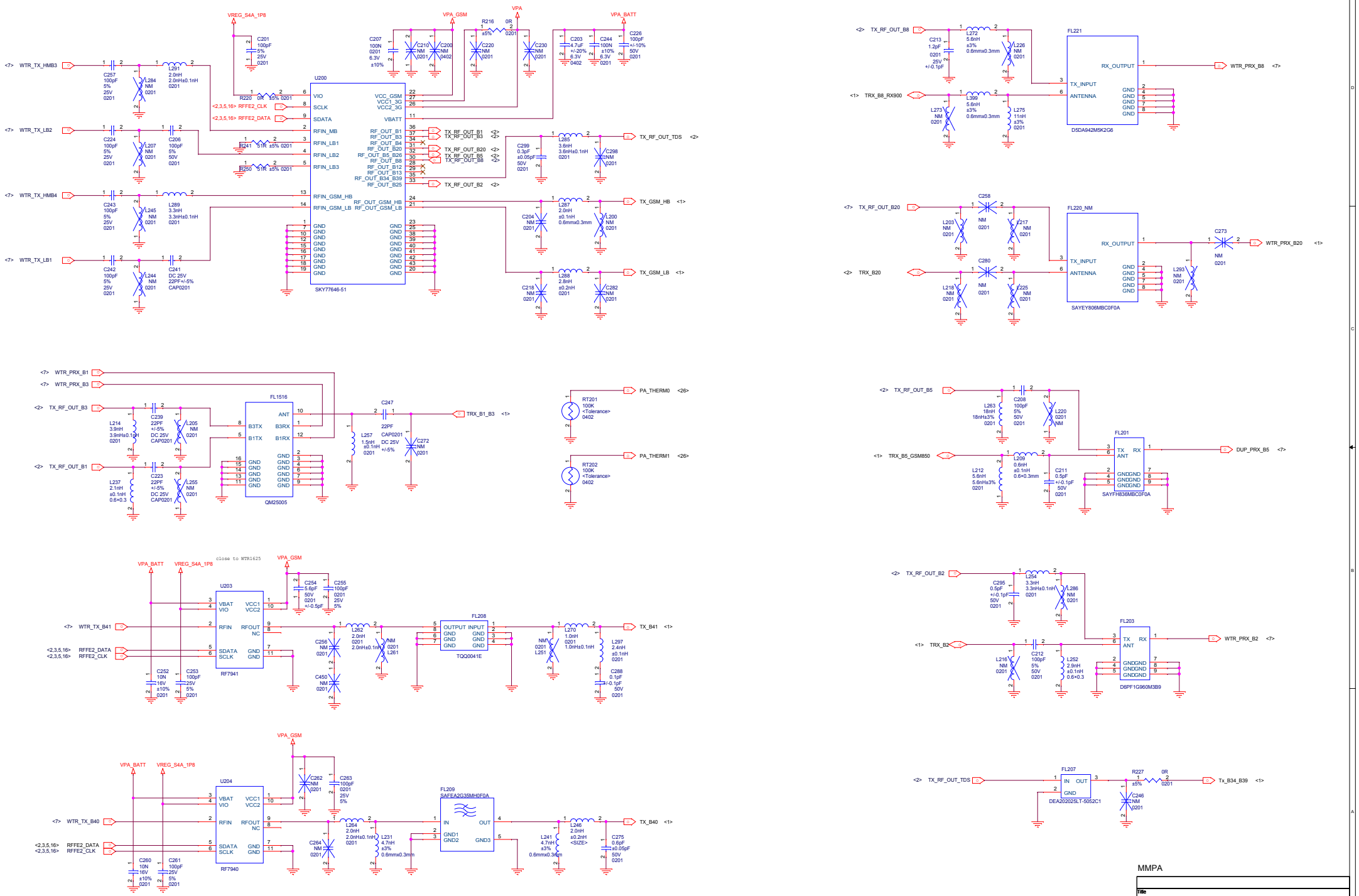

MMPA

Title	A1		
Size A2	Document Number <Doc>		Rev P0
Date: Thursday, June 30, 2016	Sheet 2 of 36		

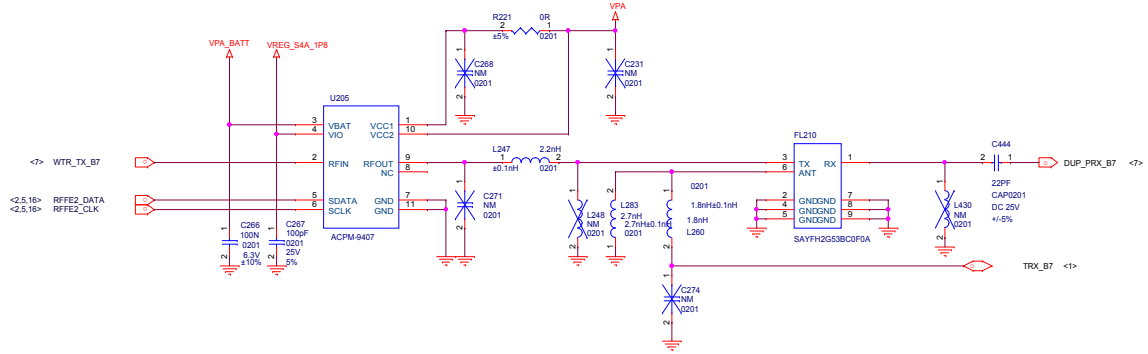

BAND7

Title	A1	
Size A2	Document Number <Doc>	Rev P0
Date: Thursday, June 30, 2016	Sheet 3 of 36	

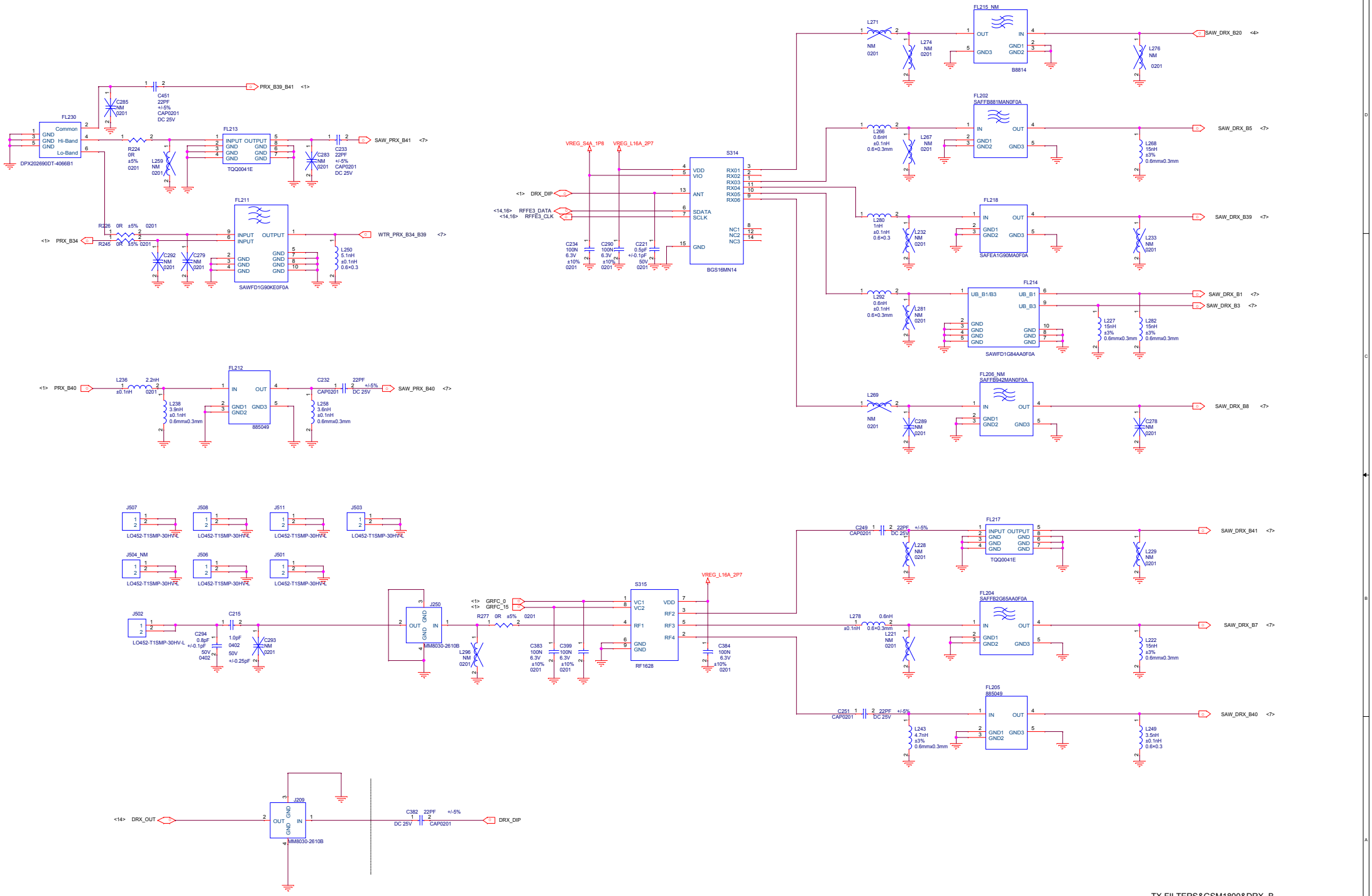

TX FILTERS&GSM1800&DRX_B

Title	A1	
Size A2	Document Number <Doc>	Rev P0
Date: Monday, August 22, 2016	Sheet 4 of 36	

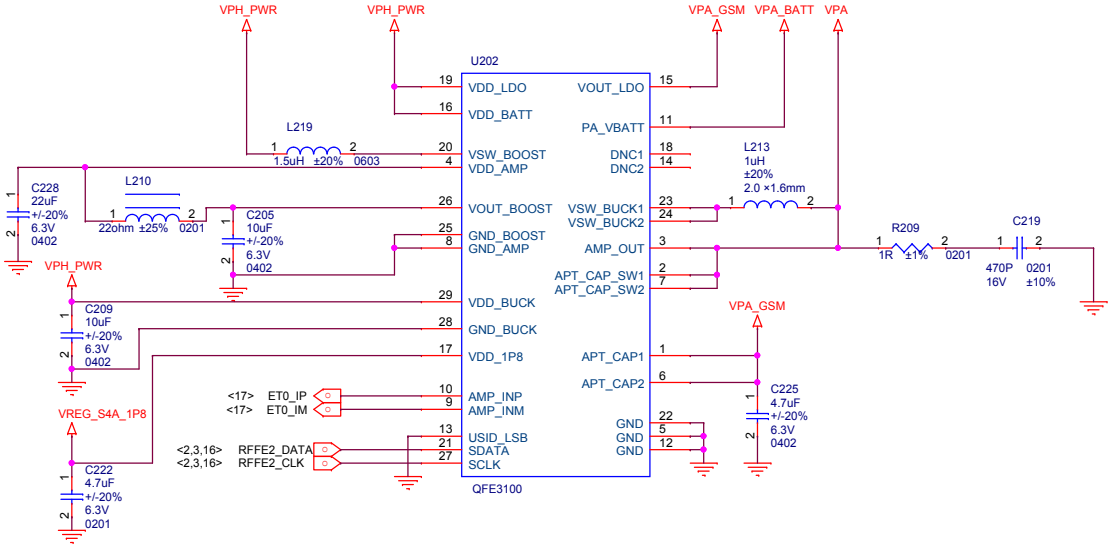

QFE3100

Title	A1	
Size A3	Document Number <Doc>	Rev P0
Date: Thursday, June 30, 2016	Sheet 5 of 36	

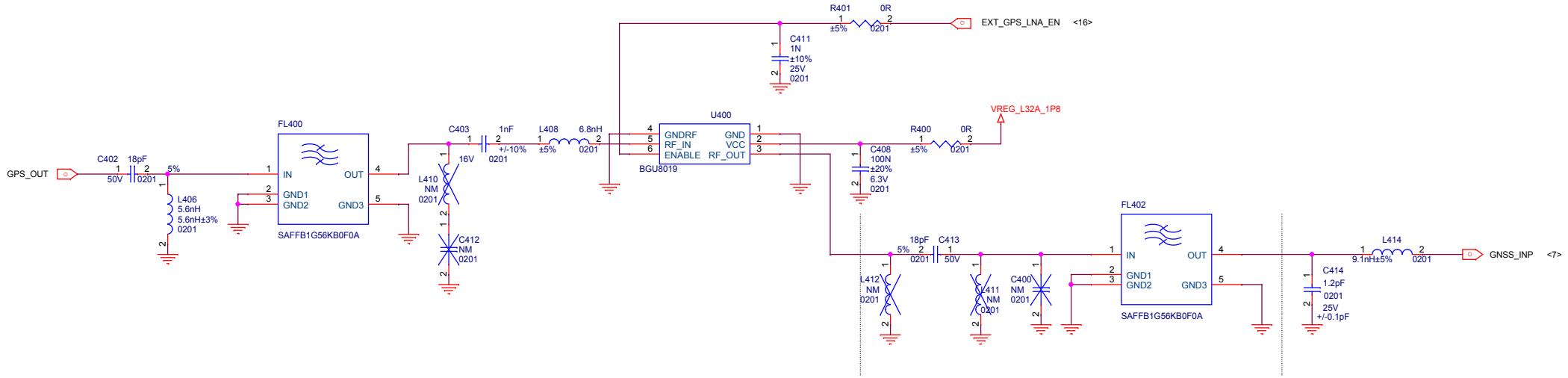

CLOSE TO ANTENNA

GPS

Title	A1	
Size A3	Document Number <Doc>	Rev P0
Date: Thursday, June 30, 2016	Sheet 6 of 36	

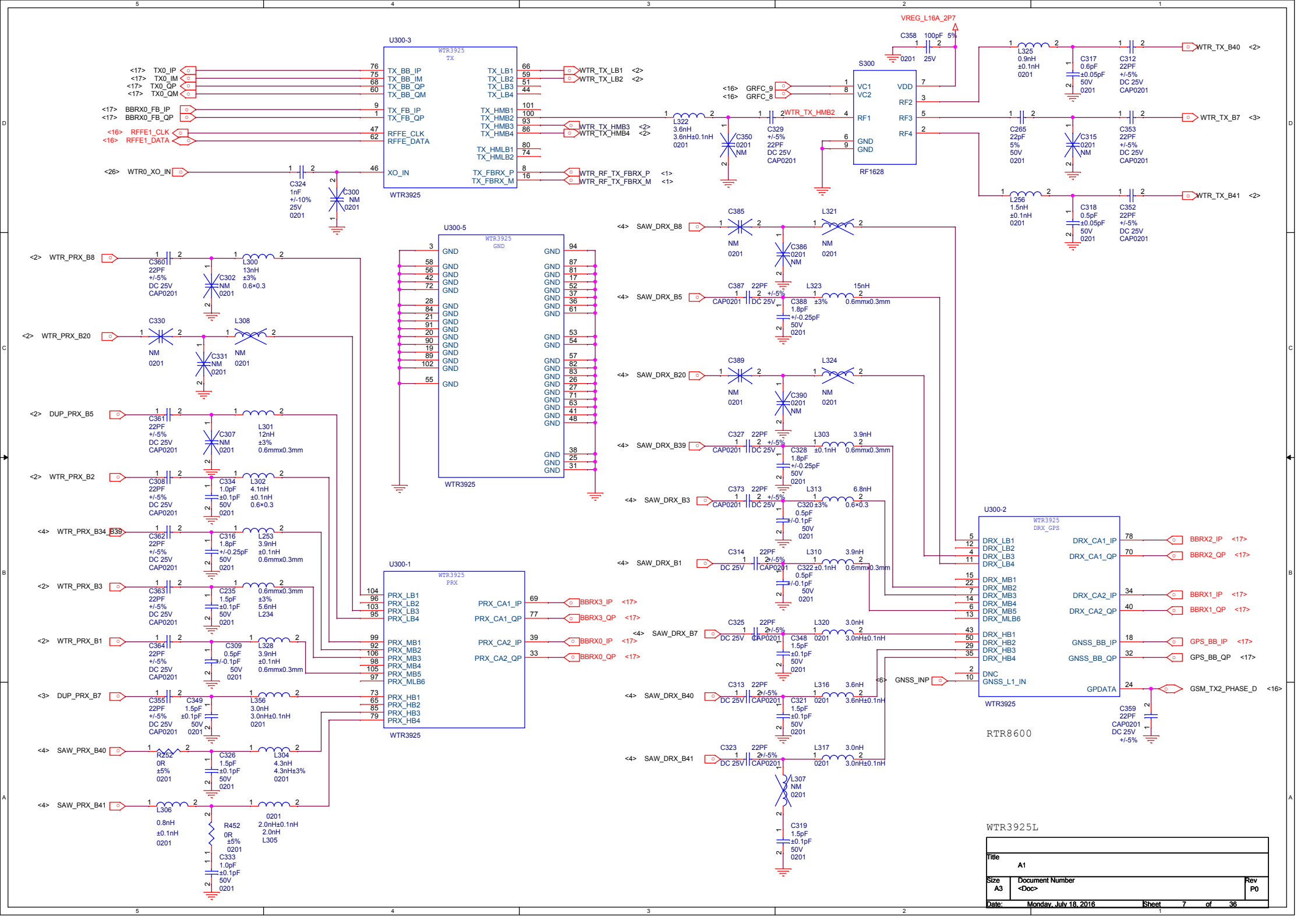
U300-3
WTR3925
TX
TX_BB_IP
TX_BB_IM
TX_BB_QP
TX_BB_QM
TX_FB_IP
TX_FB_QP
RFFE_CLK
RFFE_DATA
XO_IN
TX_LB1
TX_LB2
TX_LB3
TX_LB4
TX_HMB1
TX_HMB2
TX_HMB3
TX_HMB4
TX_HMLB1
TX_HMLB2
TX_FBRX_P
TX_FBRX_M
<17> TX0_IP
<17> TX0_IM
<17> TX0_QP
<17> TX0_QM
<17> BBRX0_FB_IP
<17> BBRX0_FB_QP
<16> RFFE1_CLK
<16> RFFE1_DATA
<26> WTR0_XO_IN
C324 1nF +/-10% 25V 0201
C300 NM 0201
WTR_TX_LB1 <2>
WTR_TX_LB2 <2>
WTR_TX_HMB3 <2>
WTR_TX_HMB4 <2>
WTR_RF_TX_FBRX_P <1>
WTR_RF_TX_FBRX_M <1>
L322 3.6nH 3.6nH±0.1nH 0201
C350 0201 NM
C329 +/-5% 22PF DC 25V CAP0201
WTR_TX_HMB2
<16> GRFC_9
<16> GRFC_8
S300
VC1
VC2
RF1
GND
GND
VDD
RF2
RF3
RF4
RF1628
VREG_L16A_2P7
C358 100pF 5% 0201 25V
L325 0.9nH ±0.1nH 0201
C317 0.6pF ±0.05pF 50V 0201
C312 22PF +/-5% DC 25V CAP0201
WTR_TX_B40 <2>
C265 22pF 5% 50V 0201
C315 0201 NM
C353 22PF +/-5% DC 25V CAP0201
WTR_TX_B7 <3>
L256 1.5nH ±0.1nH 0201
C318 0.5pF ±0.05pF 50V 0201
C352 22PF +/-5% DC 25V CAP0201
WTR_TX_B41 <2>
U300-5
WTR3925
GND
<2> WTR_PRX_B8
C360 22PF +/-5% DC 25V CAP0201
C302 NM 0201
L300 13nH ±3% 0.6×0.3
<2> WTR_PRX_B20
C330 NM 0201
C331 NM 0201
L308 NM 0201
<2> DUP_PRX_B5
C361 22PF +/-5% DC 25V CAP0201
C307 NM 0201
L301 12nH ±3% 0.6mmx0.3mm
<2> WTR_PRX_B2
C308 22PF +/-5% DC 25V CAP0201
C334 1.0pF ±0.1pF 50V 0201
L302 4.1nH ±0.1nH 0.6×0.3
<4> WTR_PRX_B34_B39
C362 22PF +/-5% DC 25V CAP0201
C316 1.8pF +/-0.25pF 50V 0201
L253 3.9nH ±0.1nH 0.6mmx0.3mm
<2> WTR_PRX_B3
C363 22PF +/-5% DC 25V CAP0201
C235 1.5pF ±0.1pF 50V 0201
0.6mmx0.3mm ±3% 5.6nH L234
<2> WTR_PRX_B1
C364 22PF +/-5% DC 25V CAP0201
C309 0.5pF +/-0.1pF 50V 0201
L328 3.9nH ±0.1nH 0.6mmx0.3mm
<3> DUP_PRX_B7
C355 22PF +/-5% DC 25V CAP0201
C349 1.5pF ±0.1pF 50V 0201
L356 3.0nH 3.0nH±0.1nH 0201
<4> SAW_PRX_B40
R252 0R ±5% 0201
C326 1.5pF ±0.1pF 50V 0201
L304 4.3nH 4.3nH±3% 0201
<4> SAW_PRX_B41
L306 0.8nH ±0.1nH 0201
R452 0R ±5% 0201
C333 1.0pF ±0.1pF 50V 0201
0201 2.0nH±0.1nH 2.0nH L305
U300-1
WTR3925
PRX
PRX_LB1
PRX_LB2
PRX_LB3
PRX_LB4
PRX_MB1
PRX_MB2
PRX_MB3
PRX_MB4
PRX_MB5
PRX_MLB6
PRX_HB1
PRX_HB2
PRX_HB3
PRX_HB4
PRX_CA1_IP
PRX_CA1_QP
PRX_CA2_IP
PRX_CA2_QP
BBRX3_IP <17>
BBRX3_QP <17>
BBRX0_IP <17>
BBRX0_QP <17>
<4> SAW_DRX_B8
C385 NM 0201
L321 NM 0201
C386 0201 NM
<4> SAW_DRX_B5
C387 22PF +/-5% CAP0201 DC 25V
L323 15nH ±3% 0.6mmx0.3mm
C388 1.8pF +/-0.25pF 50V 0201
<4> SAW_DRX_B20
C389 NM 0201
L324 NM 0201
C390 0201 NM
<4> SAW_DRX_B39
C327 22PF +/-5% CAP0201 DC 25V
L303 3.9nH ±0.1nH 0.6mmx0.3mm
C328 1.8pF +/-0.25pF 50V 0201
<4> SAW_DRX_B3
C373 22PF +/-5% CAP0201 DC 25V
L313 6.8nH ±3% 0.6×0.3
C320 0.5pF +/-0.1pF 50V 0201
<4> SAW_DRX_B1
C314 22PF +/-5% CAP0201 DC 25V
L310 3.9nH ±0.1nH 0.6mmx0.3mm
C322 0.5pF +/-0.1pF 50V 0201
<4> SAW_DRX_B7
C325 22PF +/-5% CAP0201 DC 25V
L320 3.0nH 0201 3.0nH±0.1nH
C348 1.5pF ±0.1pF 50V 0201
<4> SAW_DRX_B40
C313 22PF +/-5% CAP0201 DC 25V
L316 3.6nH 0201 3.6nH±0.1nH
C321 1.5pF ±0.1pF 50V 0201
<4> SAW_DRX_B41
C323 22PF +/-5% CAP0201 DC 25V
L317 3.0nH 0201 3.0nH±0.1nH
L307 NM 0201
C319 1.5pF ±0.1pF 50V 0201
U300-2
WTR3925
DRX_GPS
DRX_LB1
DRX_LB2
DRX_LB3
DRX_LB4
DRX_MB1
DRX_MB2
DRX_MB3
DRX_MB4
DRX_MB5
DRX_MLB6
DRX_HB1
DRX_HB2
DRX_HB3
DRX_HB4
DNC
GNSS_L1_IN
DRX_CA1_IP
DRX_CA1_QP
DRX_CA2_IP
DRX_CA2_QP
GNSS_BB_IP
GNSS_BB_QP
GPDATA
BBRX2_IP <17>
BBRX2_QP <17>
BBRX1_IP <17>
BBRX1_QP <17>
GPS_BB_IP <17>
GPS_BB_QP <17>
GSM_TX2_PHASE_D <16>
<6> GNSS_INP
C359 22PF CAP0201 DC 25V +/-5%
RTR8600
WTR3925L
Title
A1
Size A3
Document Number <Doc>
Rev P0
Date: Monday, July 18, 2016
Sheet 7 of 36

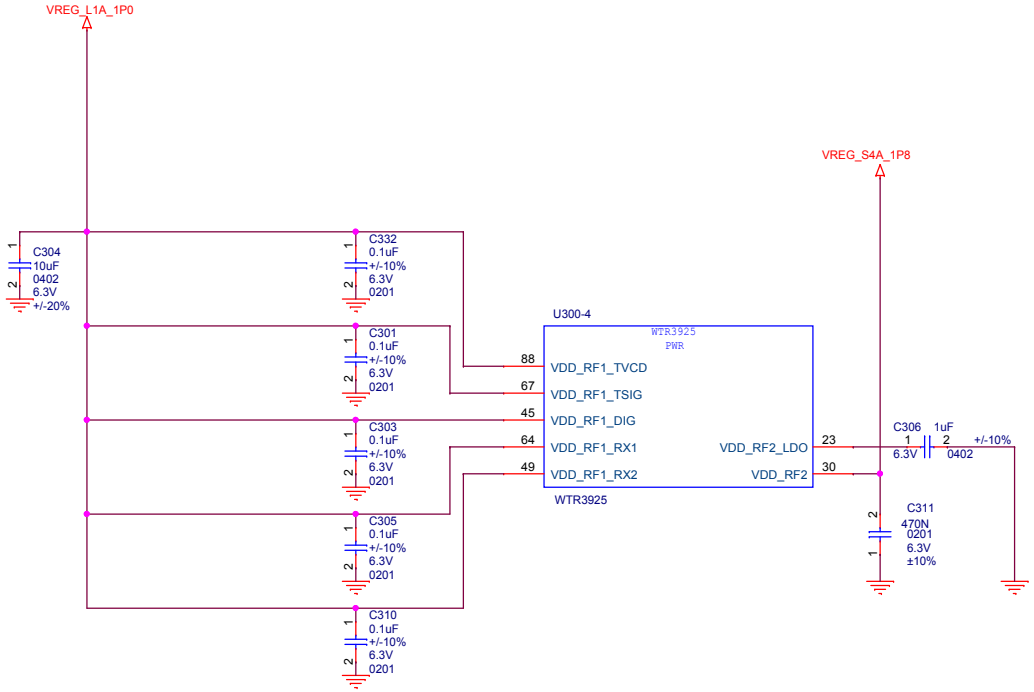

WTR3925L BYPASS

Title	A1	
Size A3	Document Number <Doc>	Rev P0
Date: Thursday, June 30, 2016	Sheet 8 of 36	

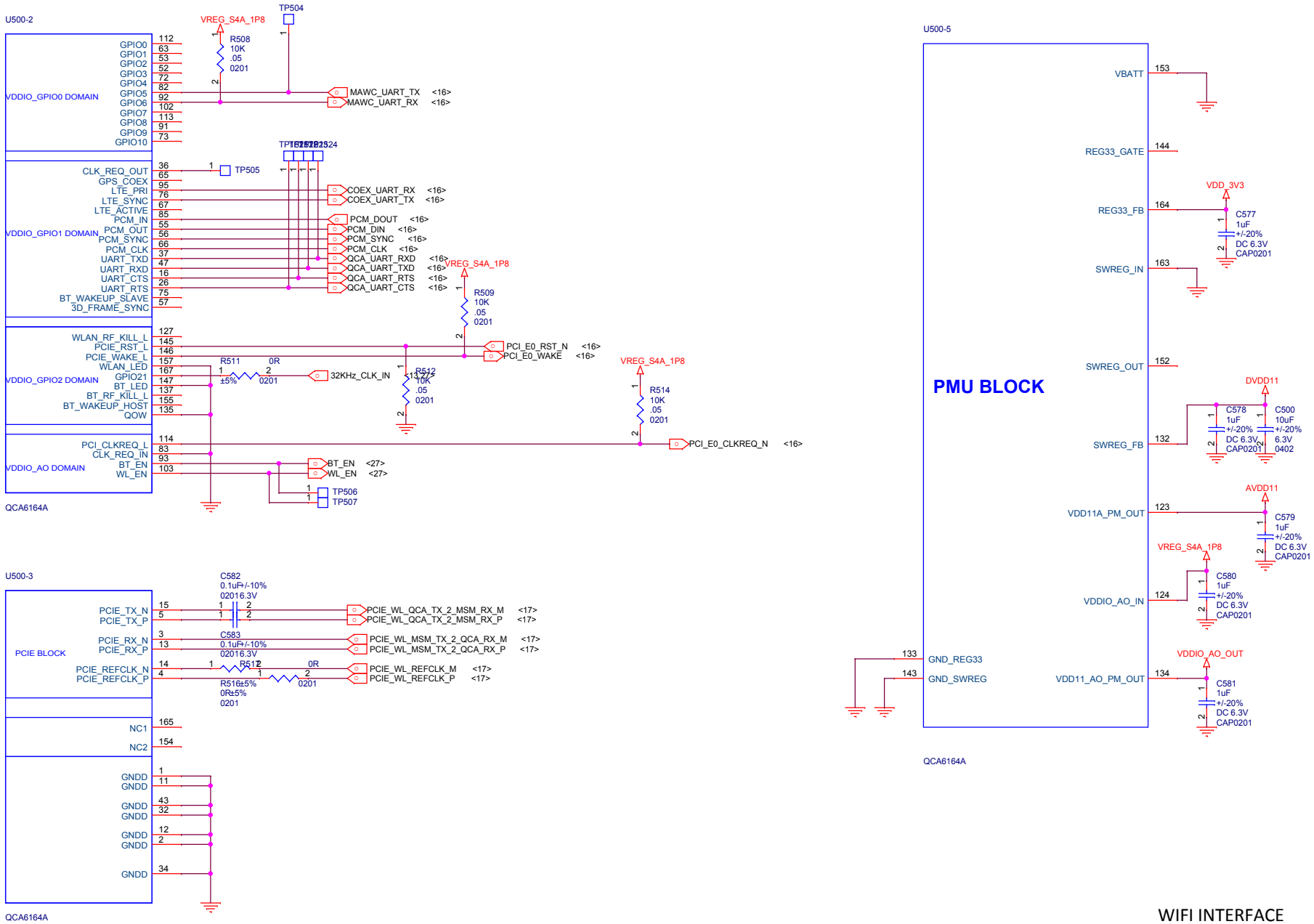

WIFI INTERFACE

Title	A1	
Size A3	Document Number <Doc>	Rev P0
Date: Thursday, June 30, 2016	Sheet 9 of 36	

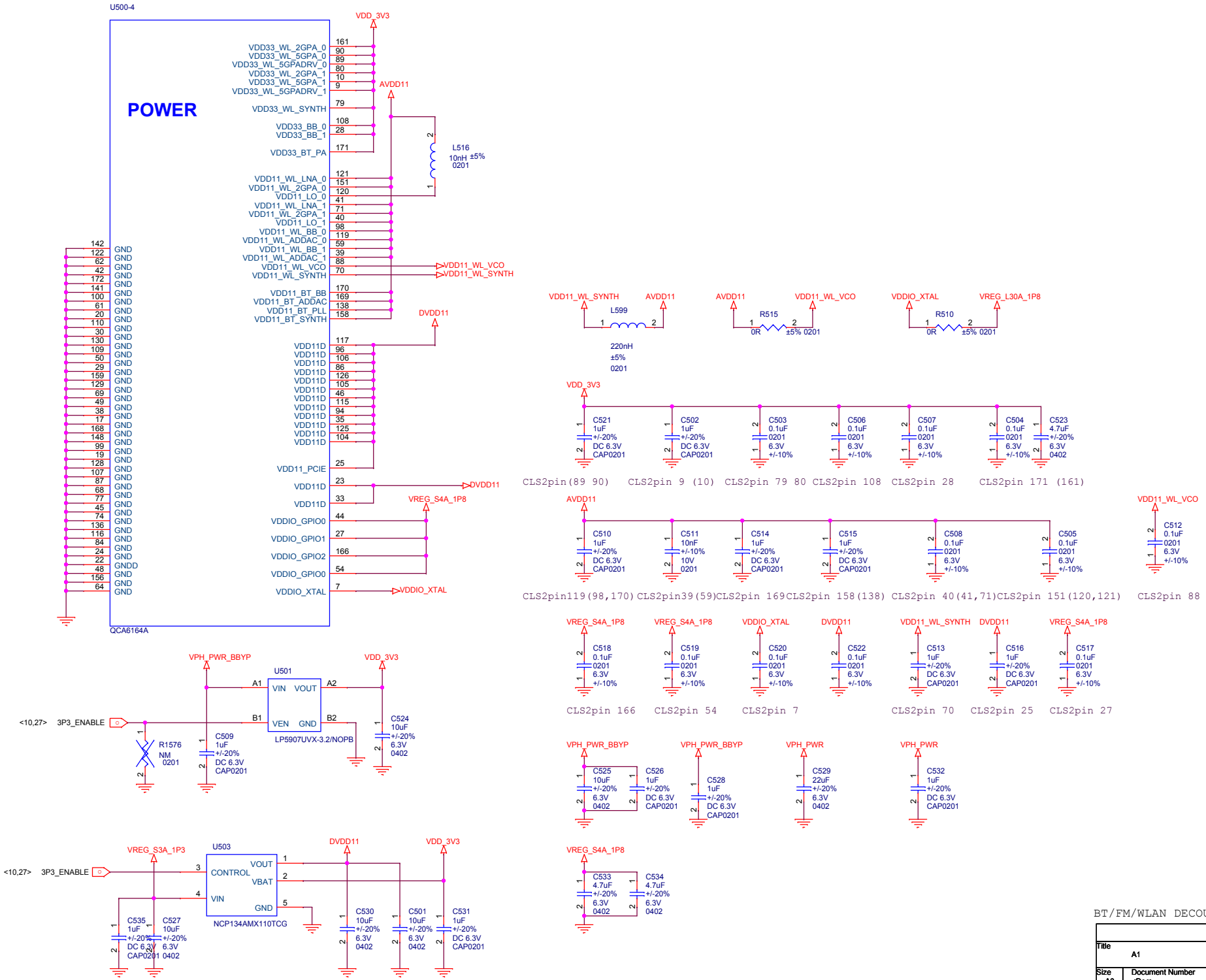

BT/FM/WLAN DECOUP

Title	A1	
Size A3	Document Number <Doc>	Rev P0
Date: Thursday, June 30, 2016	Sheet 10 of 36	

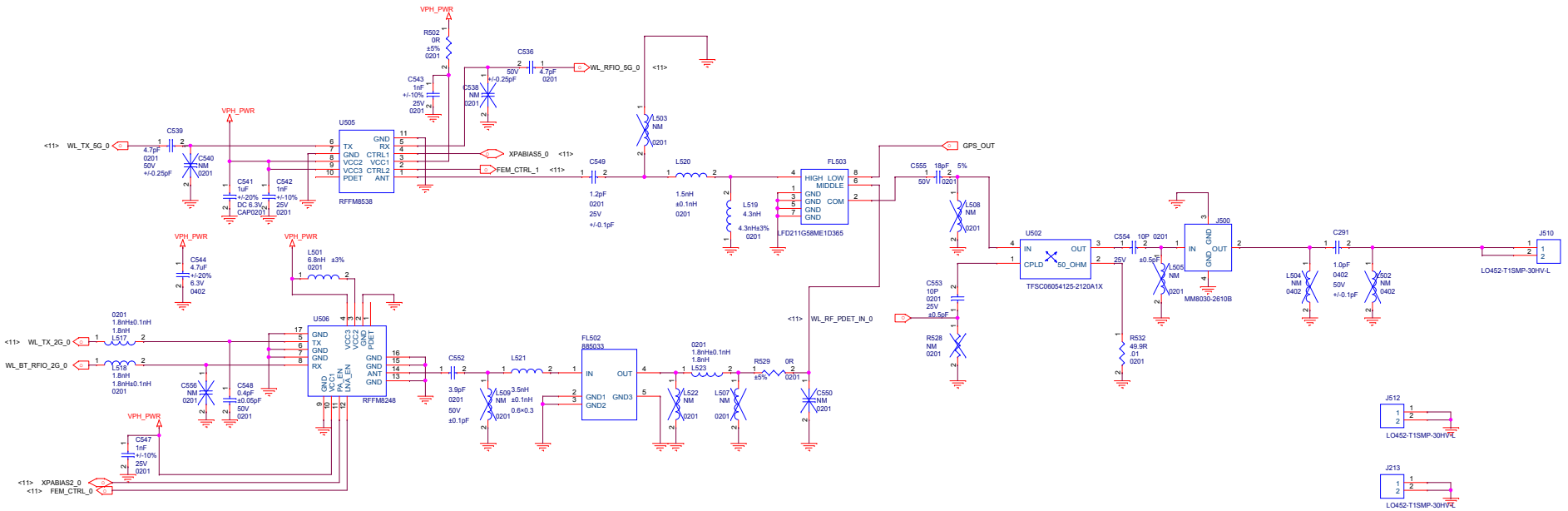

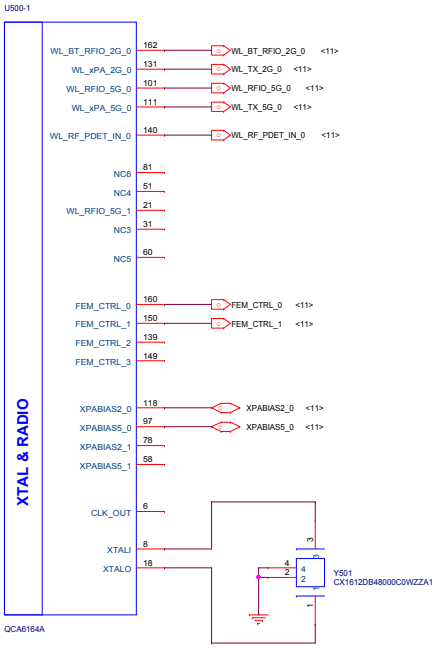

BT/WIFI FEM

Title	A1		
Size A2	Document Number <Doc>		Rev P0
Date: Monday, August 22, 2016	Sheet 11 of 36		

FM

Title	A1	
Size A3	Document Number <Doc>	Rev P0
Date: Thursday, June 30, 2016	Sheet 12 of 36	

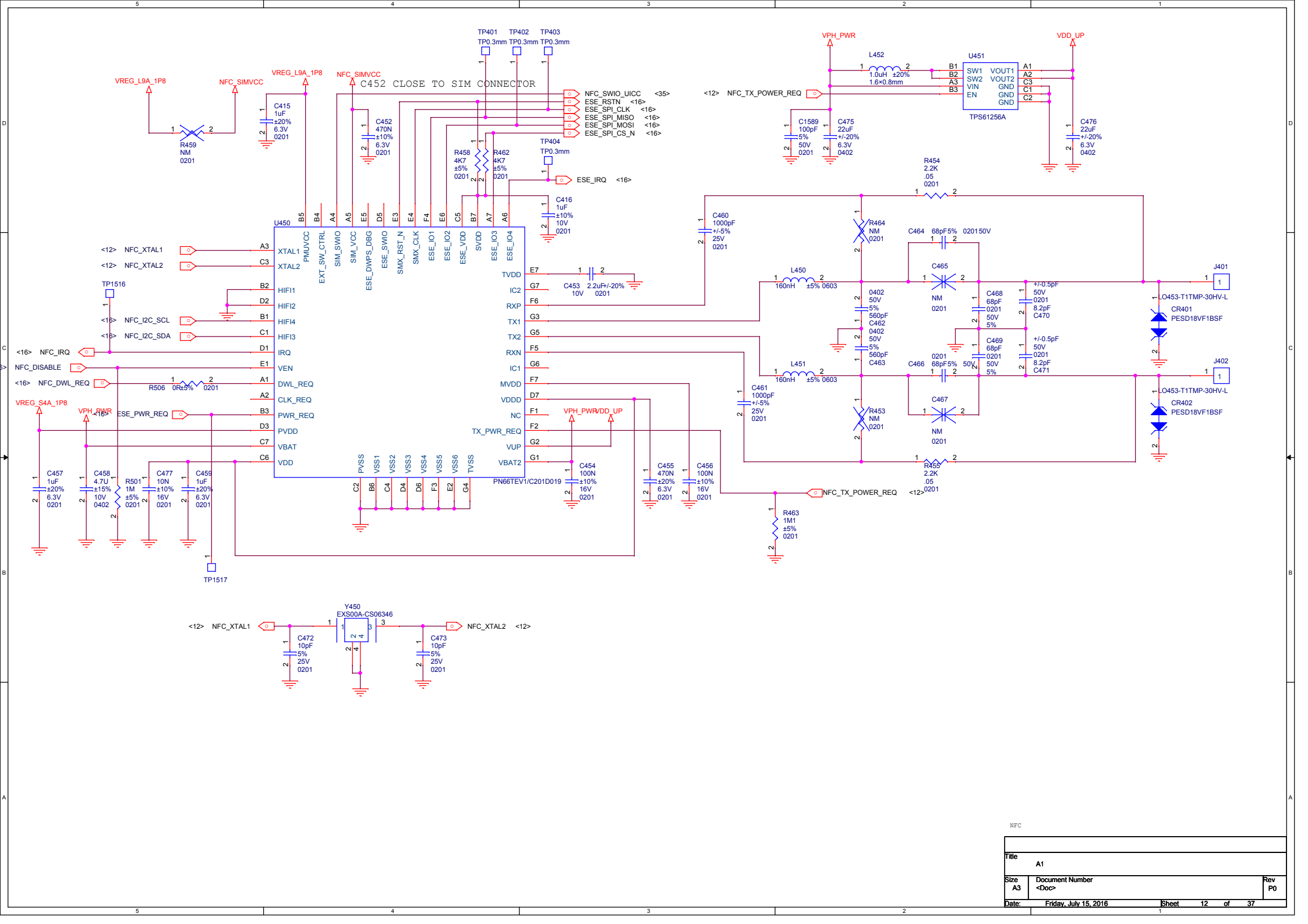

NFC

Title	A1	
Size A3	Document Number <Doc>	Rev P0
Date: Friday, July 15, 2016	Sheet 12 of 37	

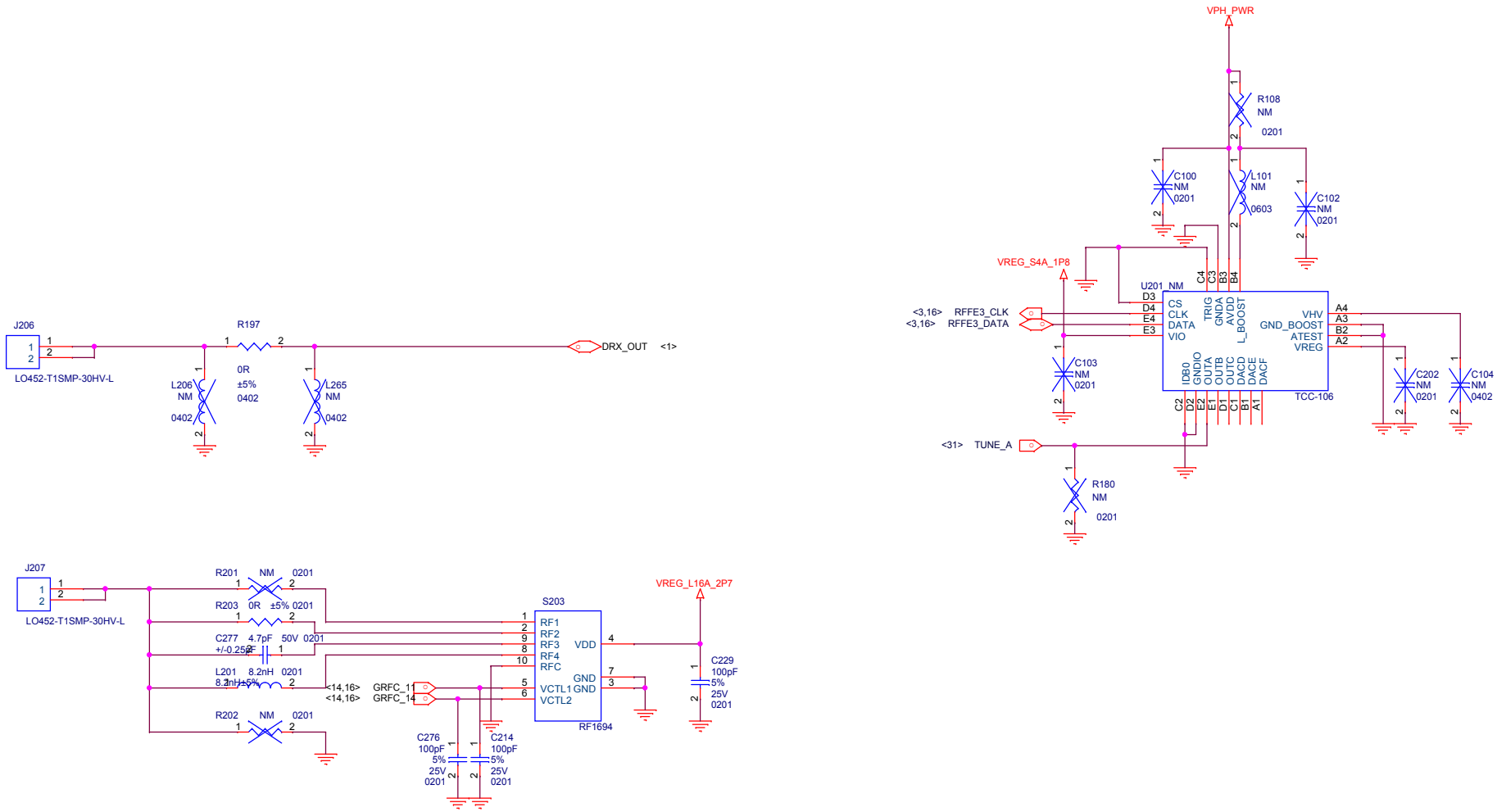

TUNER

Title	A1	
Size A3	Document Number <Doc>	Rev P0
Date: Monday, August 22, 2016	Sheet 13 of 36	

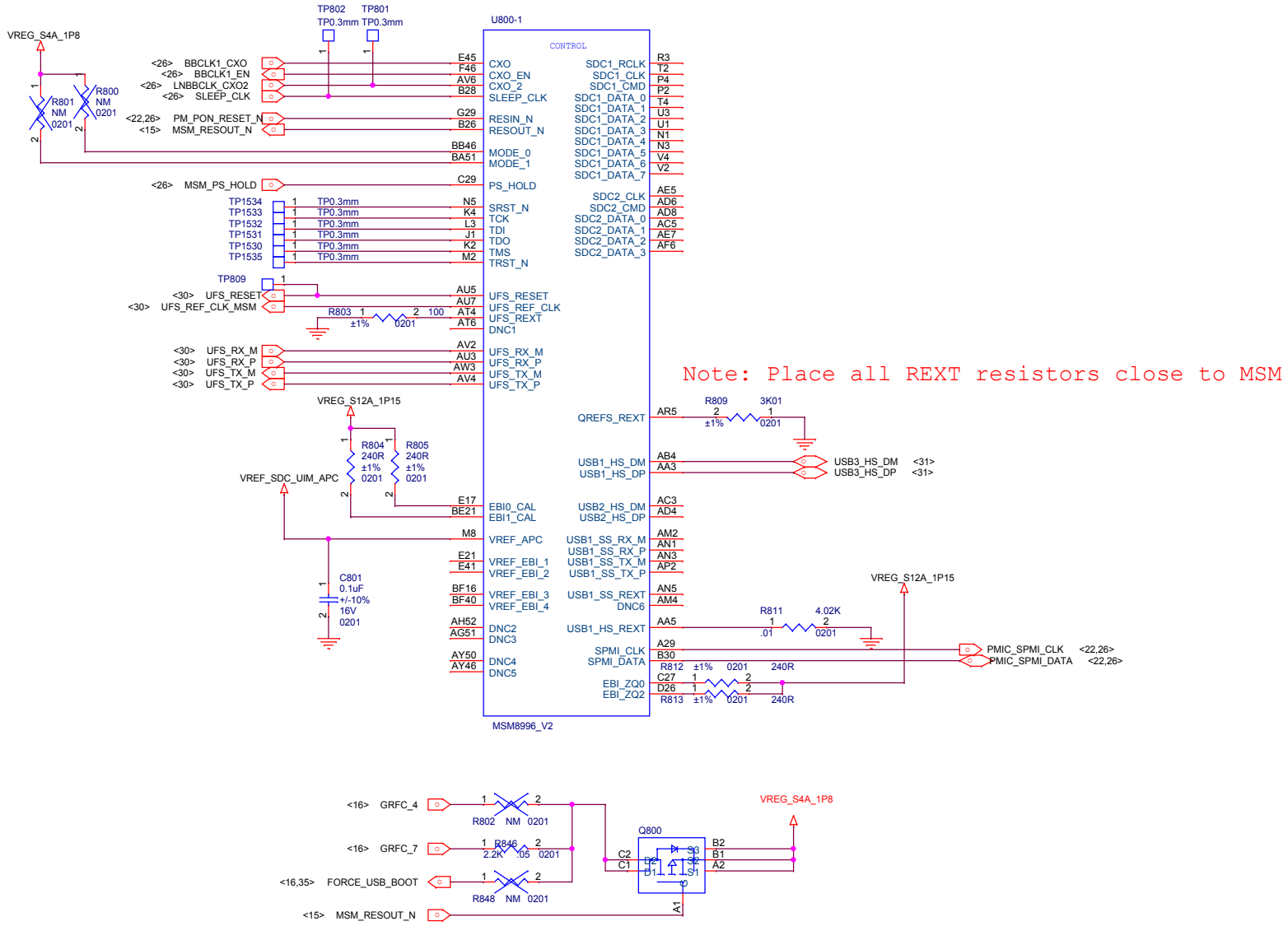

MSM8996 CONTROL

Title	A1		
Size A3	Document Number <Doc>		Rev P0
Date: Thursday, June 30, 2016	Sheet 14 of 36		

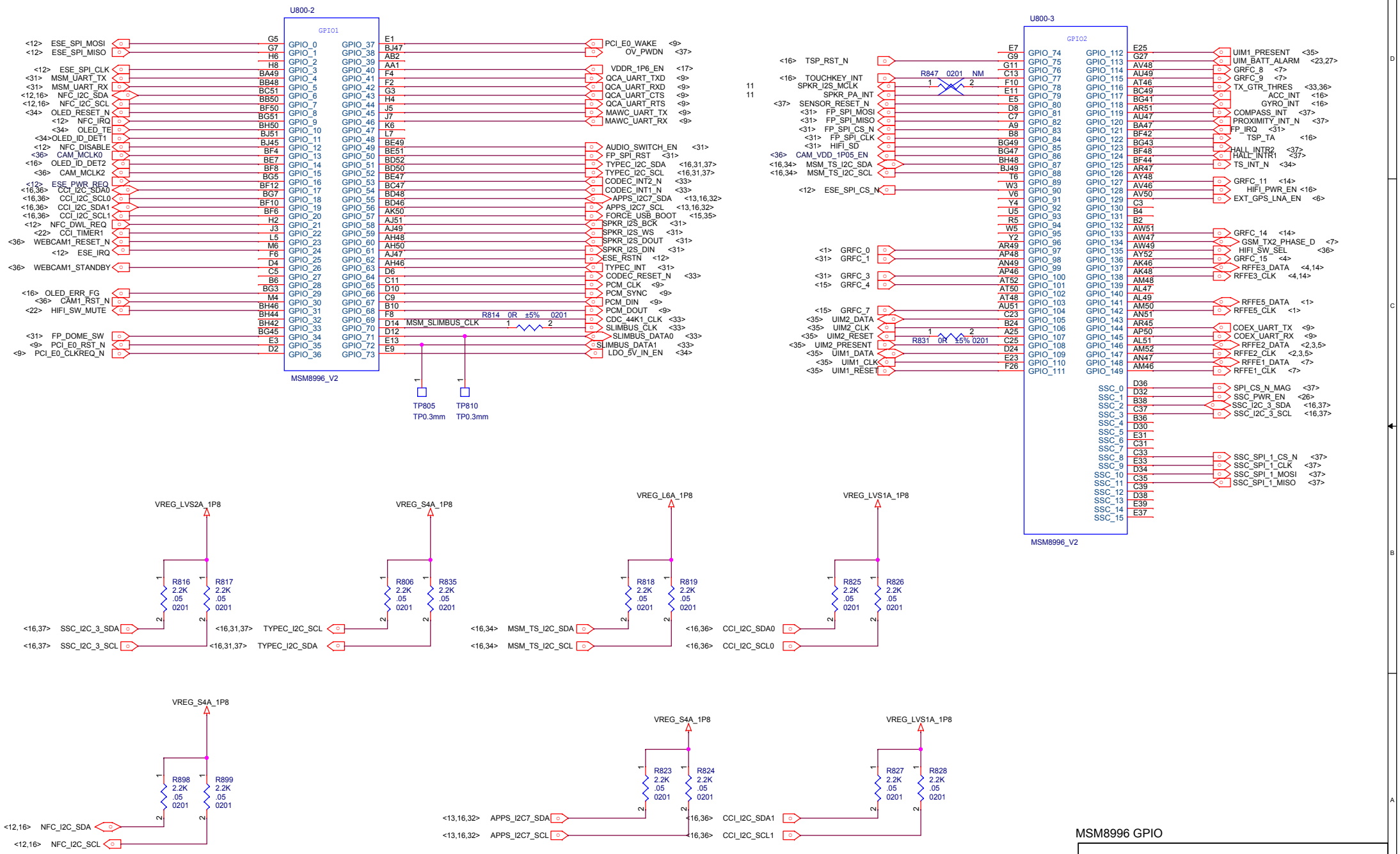

MSM8996 GPIO

Title A1		
Size A3	Document Number <Doc>	Rev P0
Date: Thursday, June 30, 2016	Sheet 15 of 36	

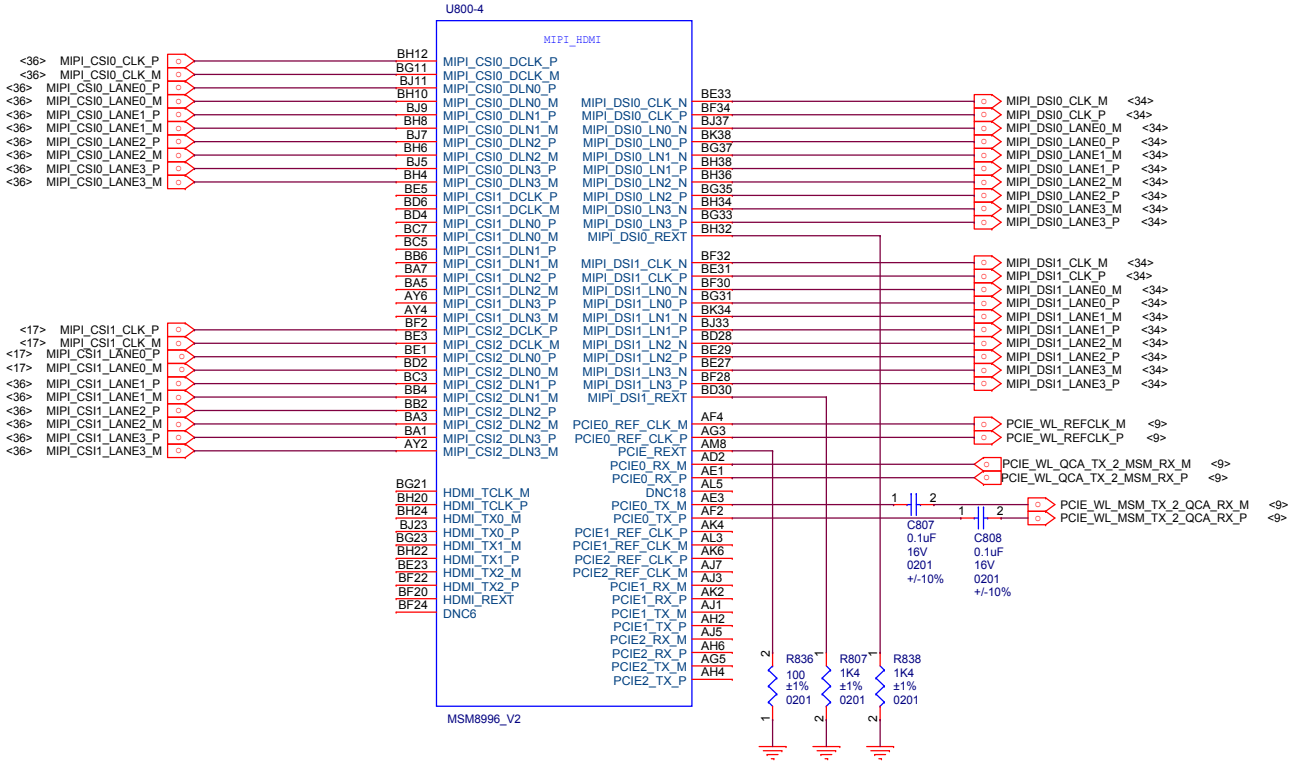

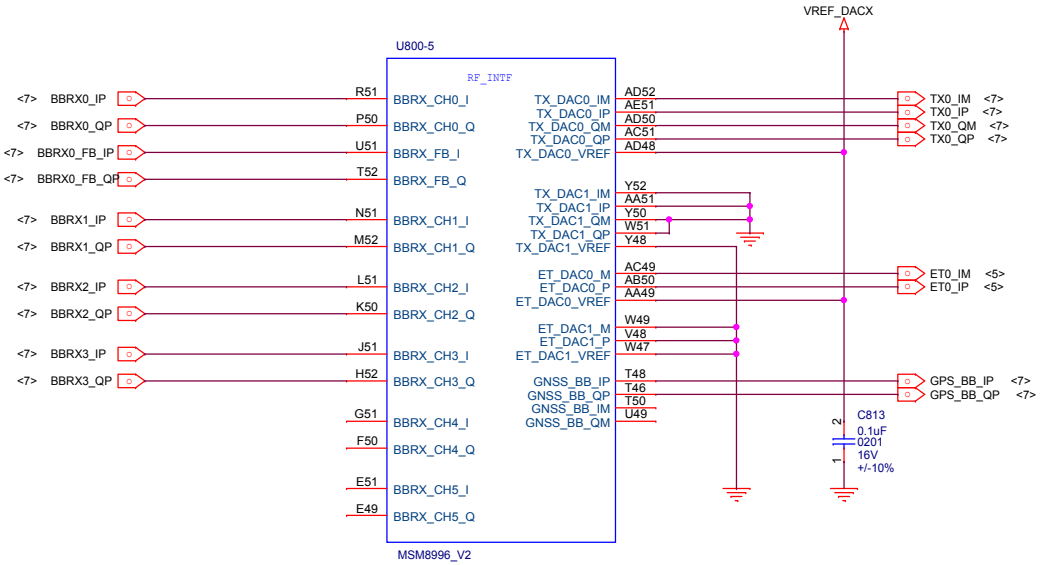

MSM8996 MIPI

Title	A1	
Size A3	Document Number <Doc>	Rev P0
Date: Thursday, June 30, 2016	Sheet 16 of 36	

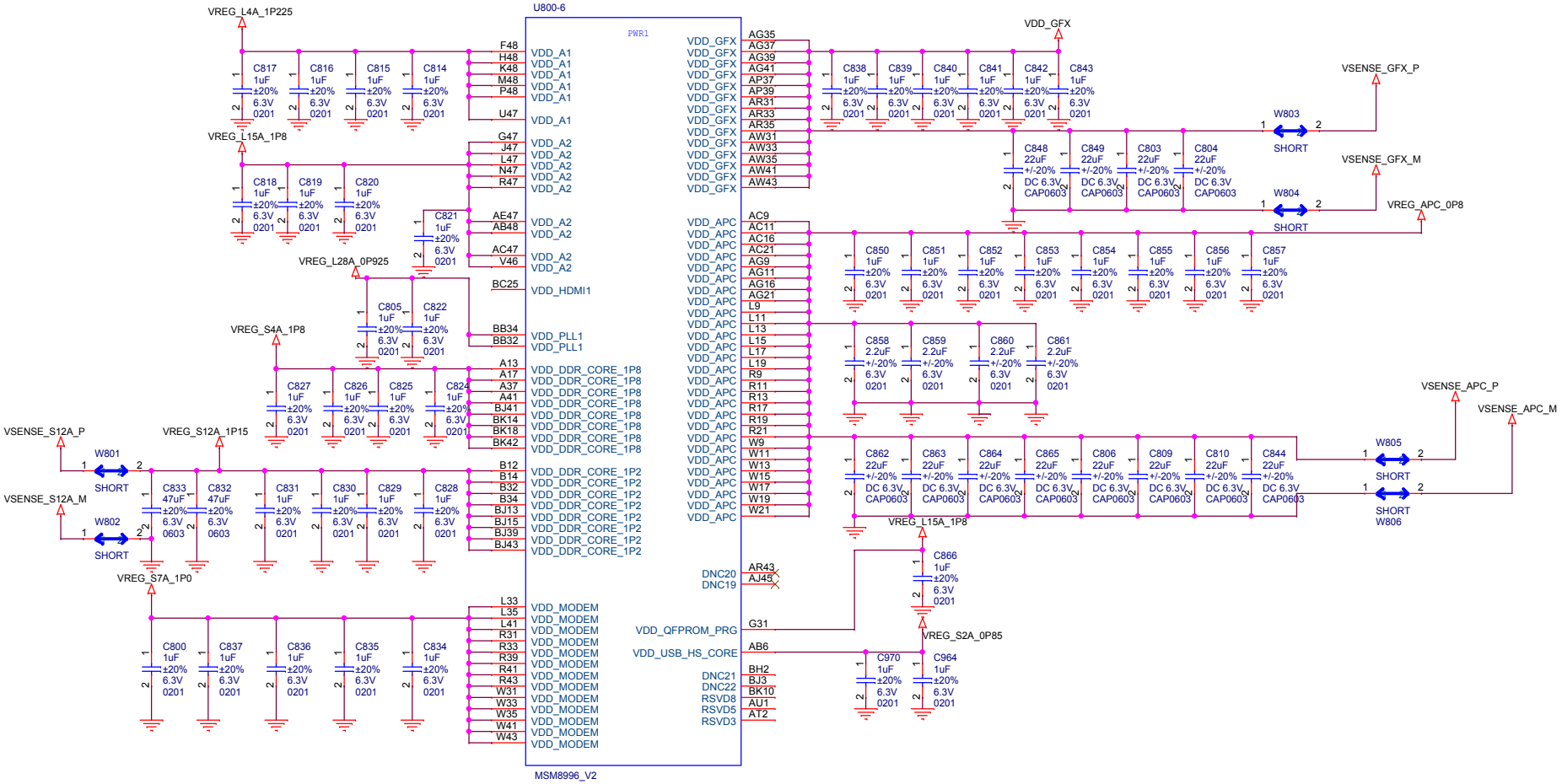

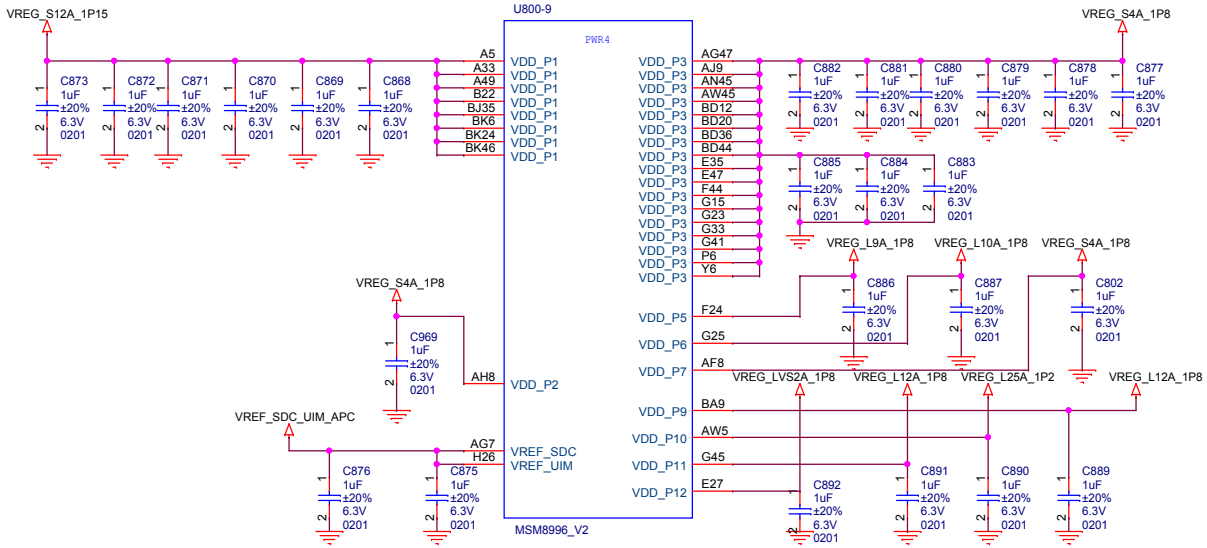

MSM8996 PWR1

Title	A1		
Size A3	Document Number <Doc>		Rev P0
Date: Thursday, June 30, 2016	Sheet 17 of 36		

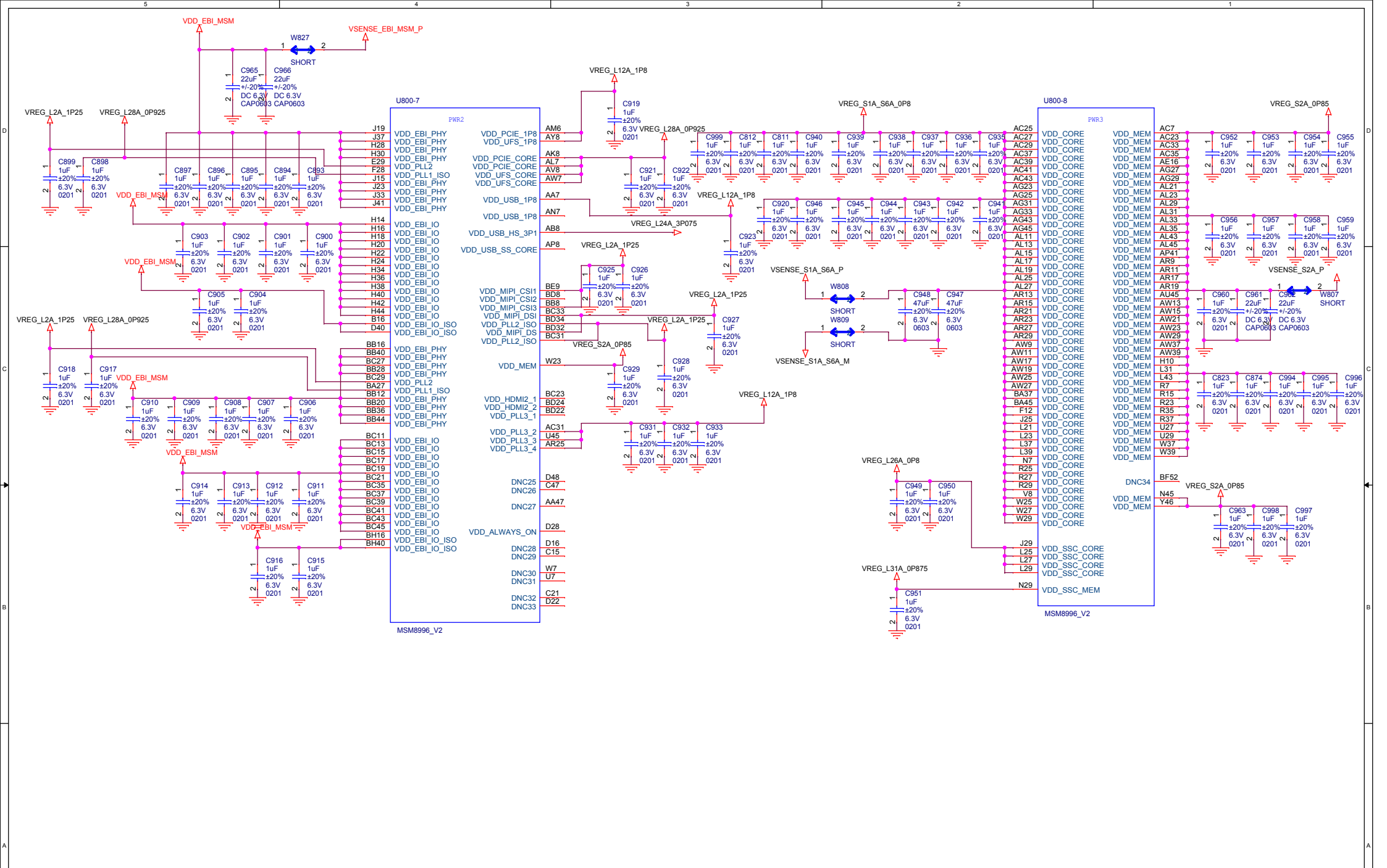

MSM8996 PWR2

Title	A1	
Size A3	Document Number <Doc>	Rev P0
Date: Thursday, June 30, 2016	Sheet 18 of 36	

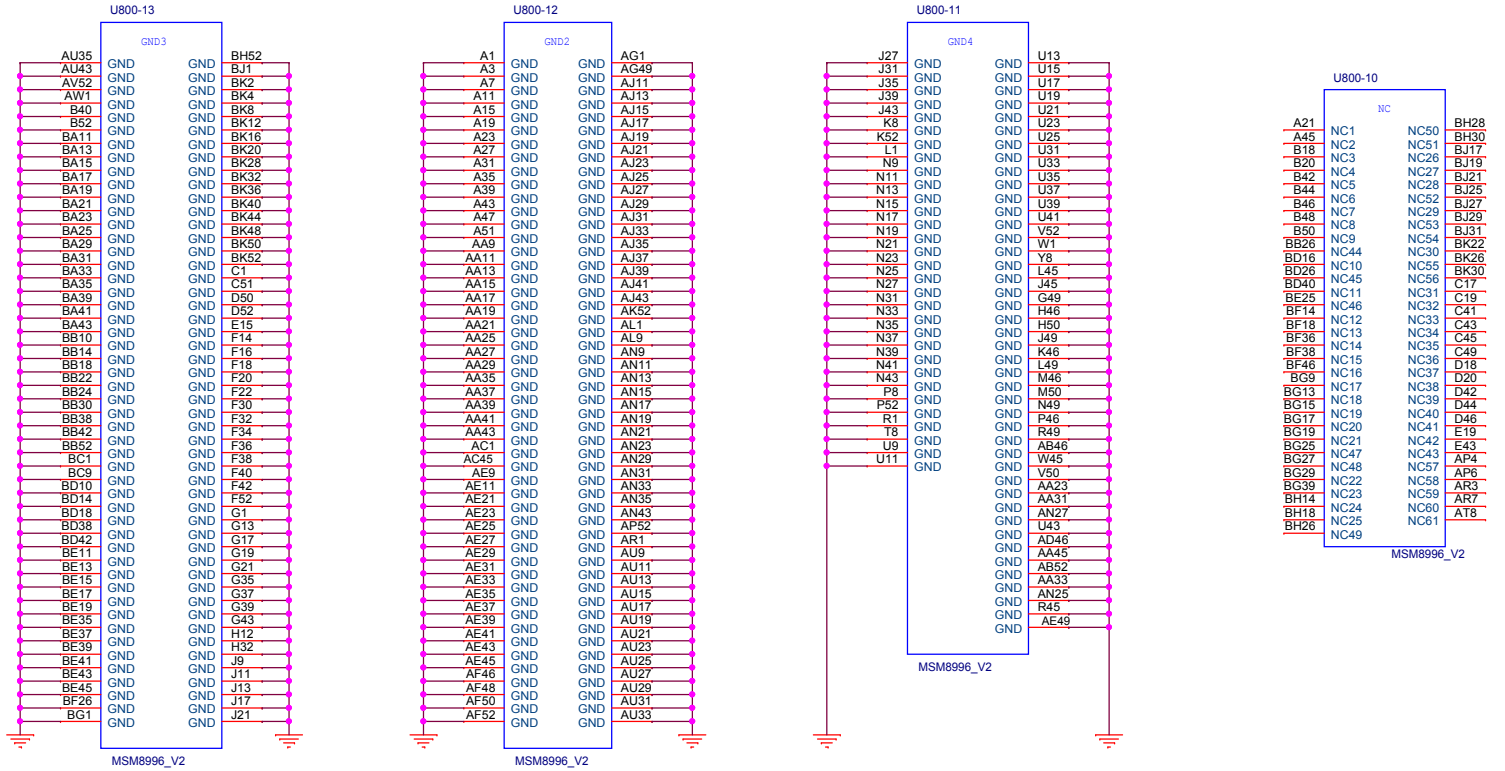

MSM8996 GND

Title	A1	
Size A3	Document Number <Doc>	Rev P0
Date: Thursday, June 30, 2016	Sheet 19 of 36	

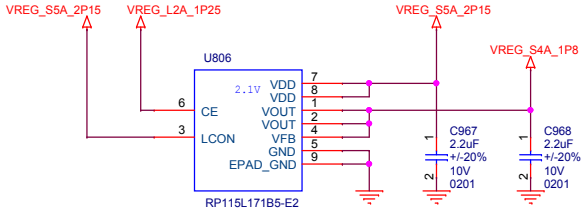

MSM8996 LPDDR REGULATOR

Title	A1	
Size A3	Document Number <Doc>	Rev P0
Date: Thursday, June 30, 2016	Sheet 20 of 36	

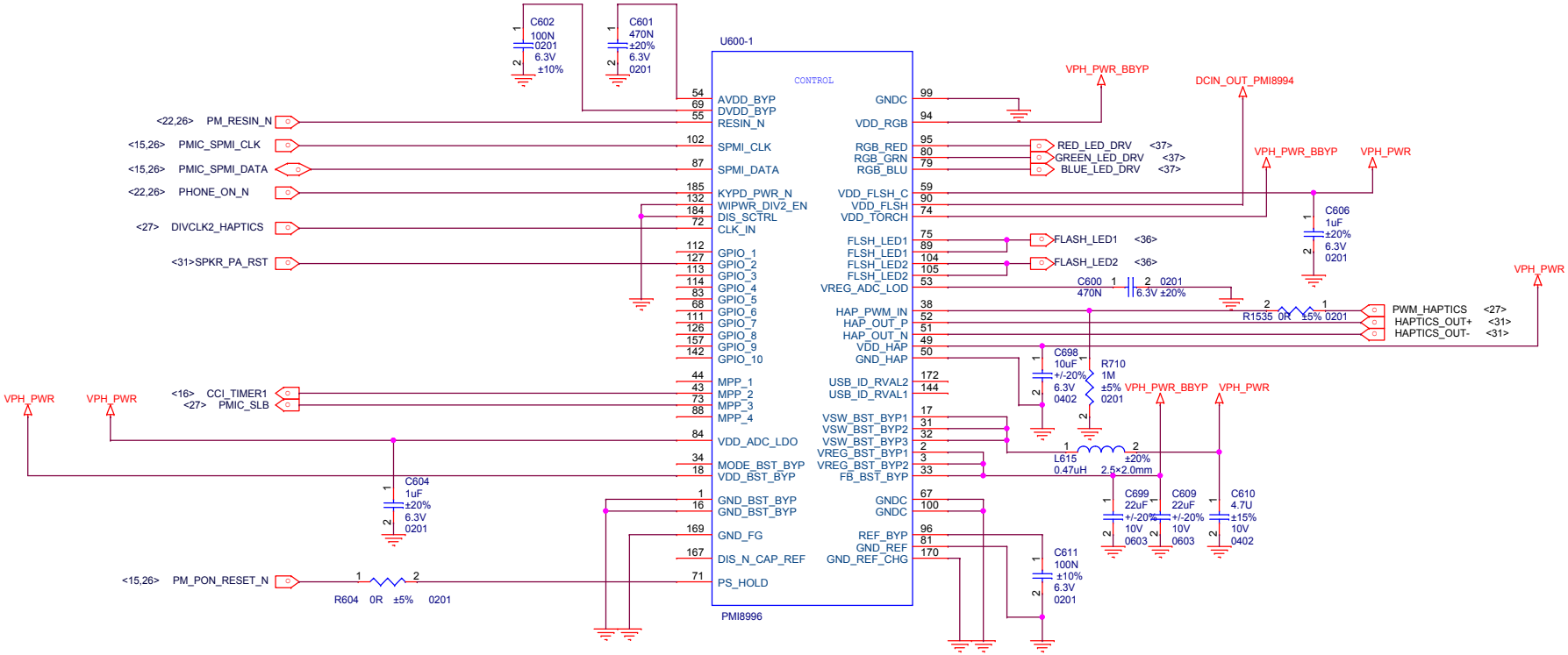

To be confirmed!

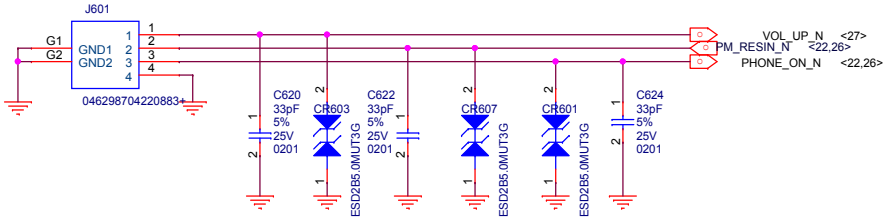

PMI8994 CONTROL

Title	A1	
Size A3	Document Number <Doc>	Rev P0
Date: Thursday, June 30, 2016	Sheet 21 of 36	

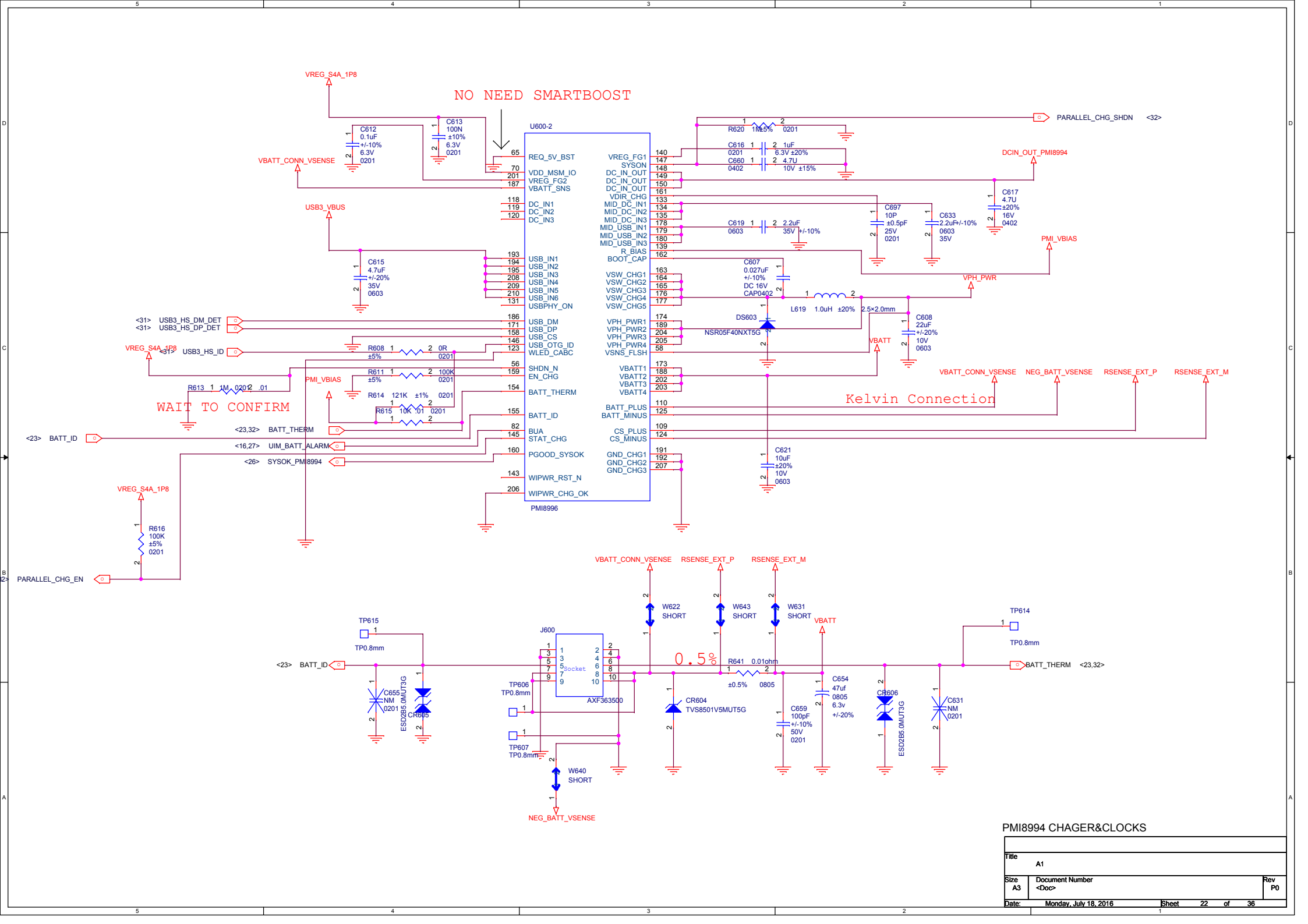

PMI8994 CHAGER&CLOCKS

Title	A1	
Size A3	Document Number <Doc>	Rev P0
Date: Monday, July 18, 2016	Sheet 22 of 36	

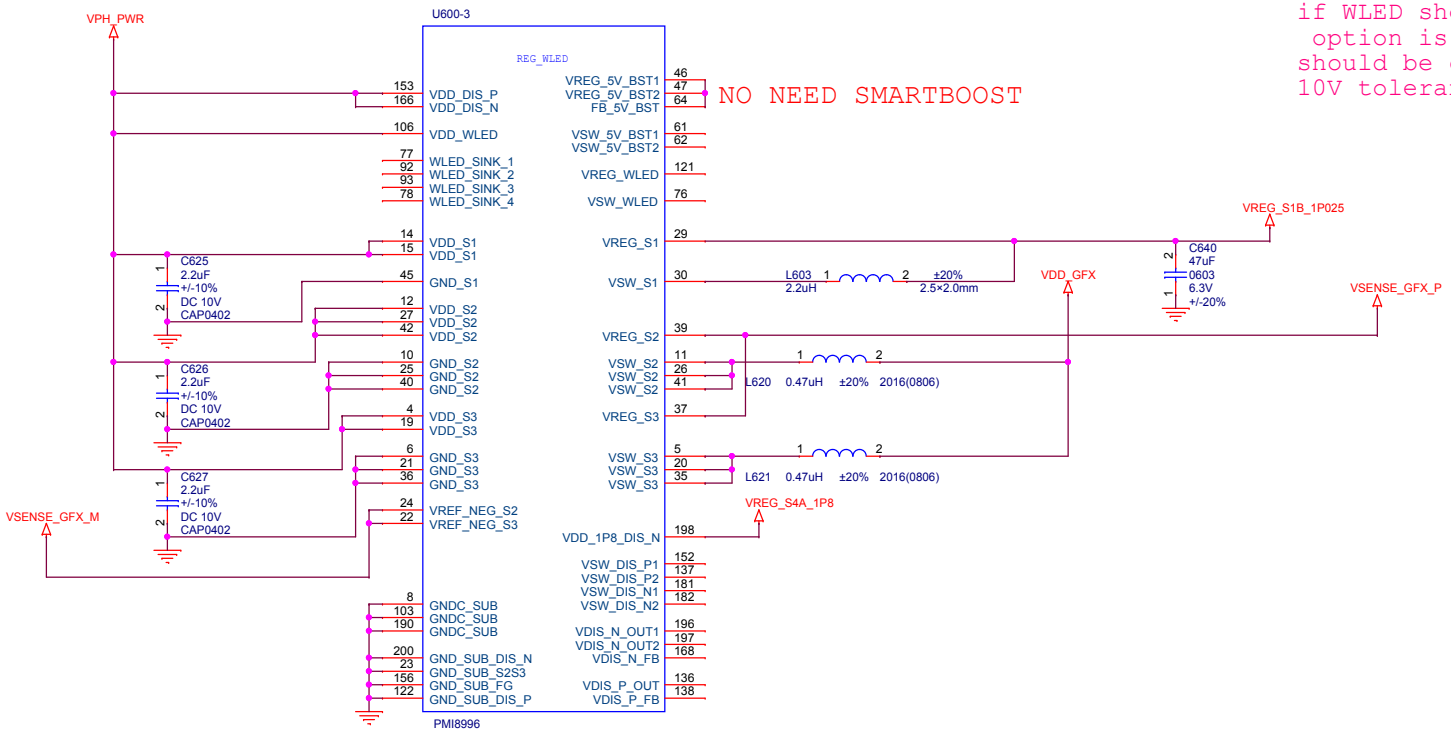

if WLED short circuit protection option is not used, C1670 should be changed to 10uF, 10V tolerance capacitor

PMI8994 REG WLED

Title	A1	
Size A3	Document Number <Doc>	Rev P0
Date: Thursday, June 30, 2016	Sheet 23 of 36	

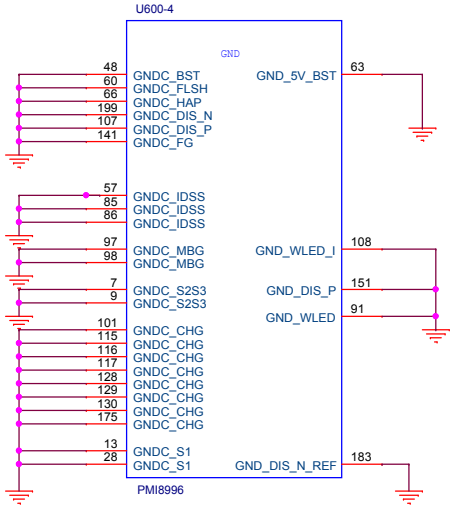

CAD NOTE: Connect to pin183 then GND with single via

PMI8994 GND

Title	A1	
Size A3	Document Number <Doc>	Rev P0
Date: Thursday, June 30, 2016	Sheet 24 of 36	

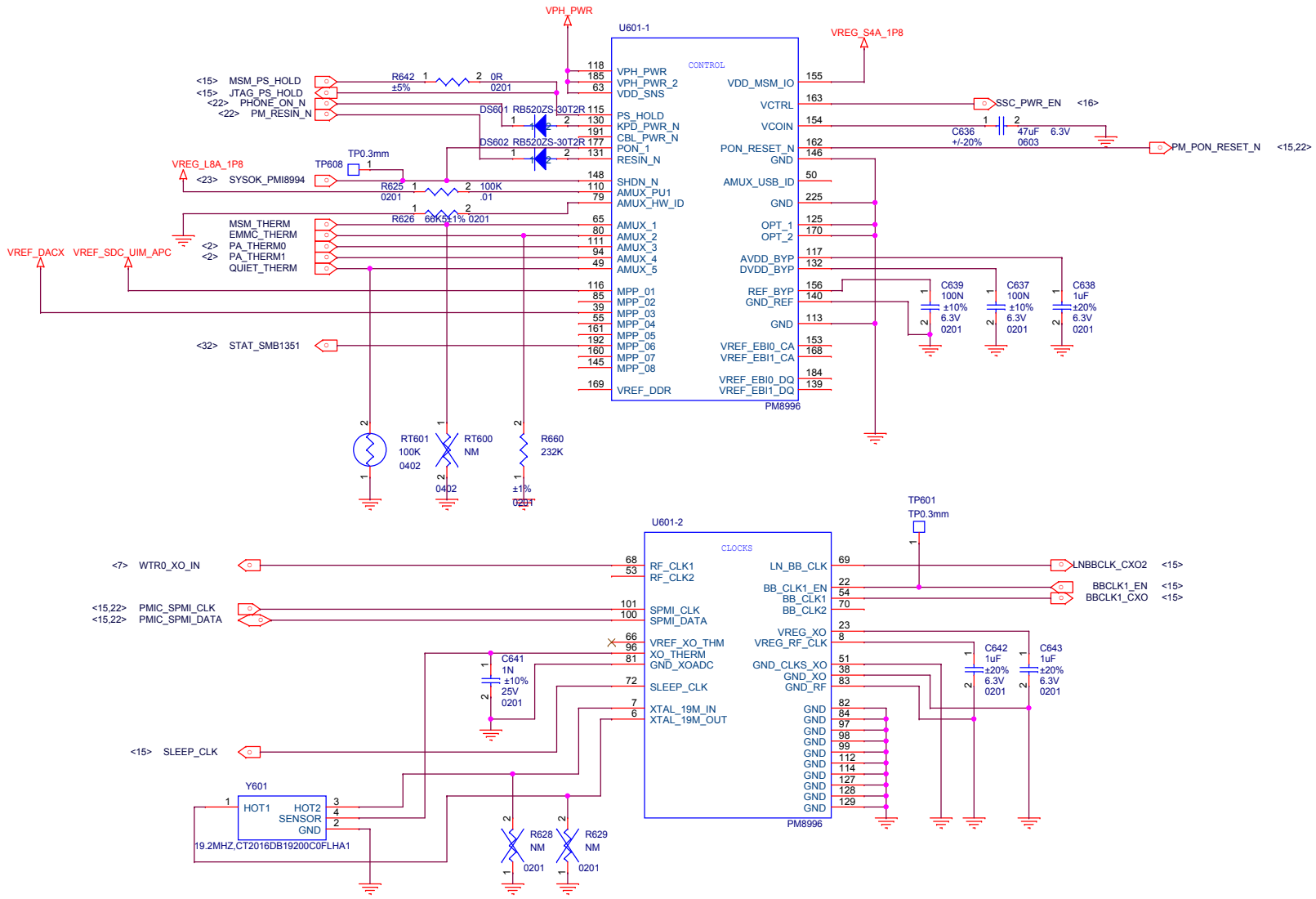

PM8996 CONTROL

Title	A1		
Size A3	Document Number <Doc>		Rev P0
Date: Friday, August 19, 2016	Sheet 25 of 36		

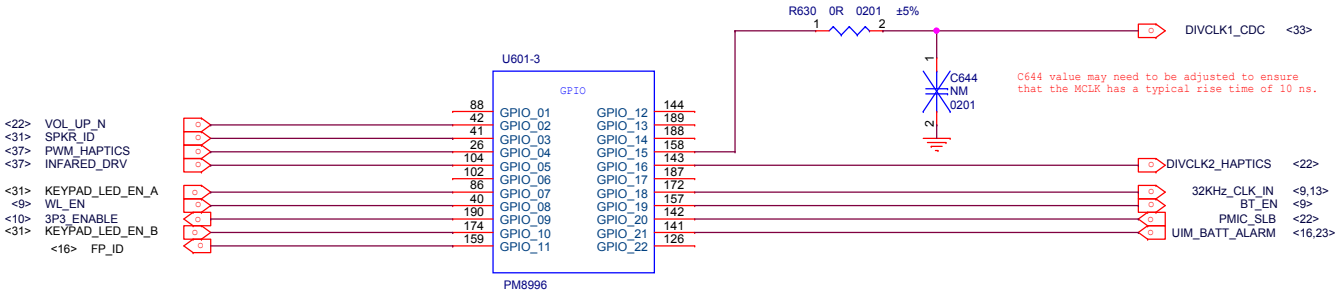

PM8996 GPIO

Title	A1	
Size A3	Document Number <Doc>	Rev P0
Date: Thursday, June 30, 2016	Sheet 26 of 36	

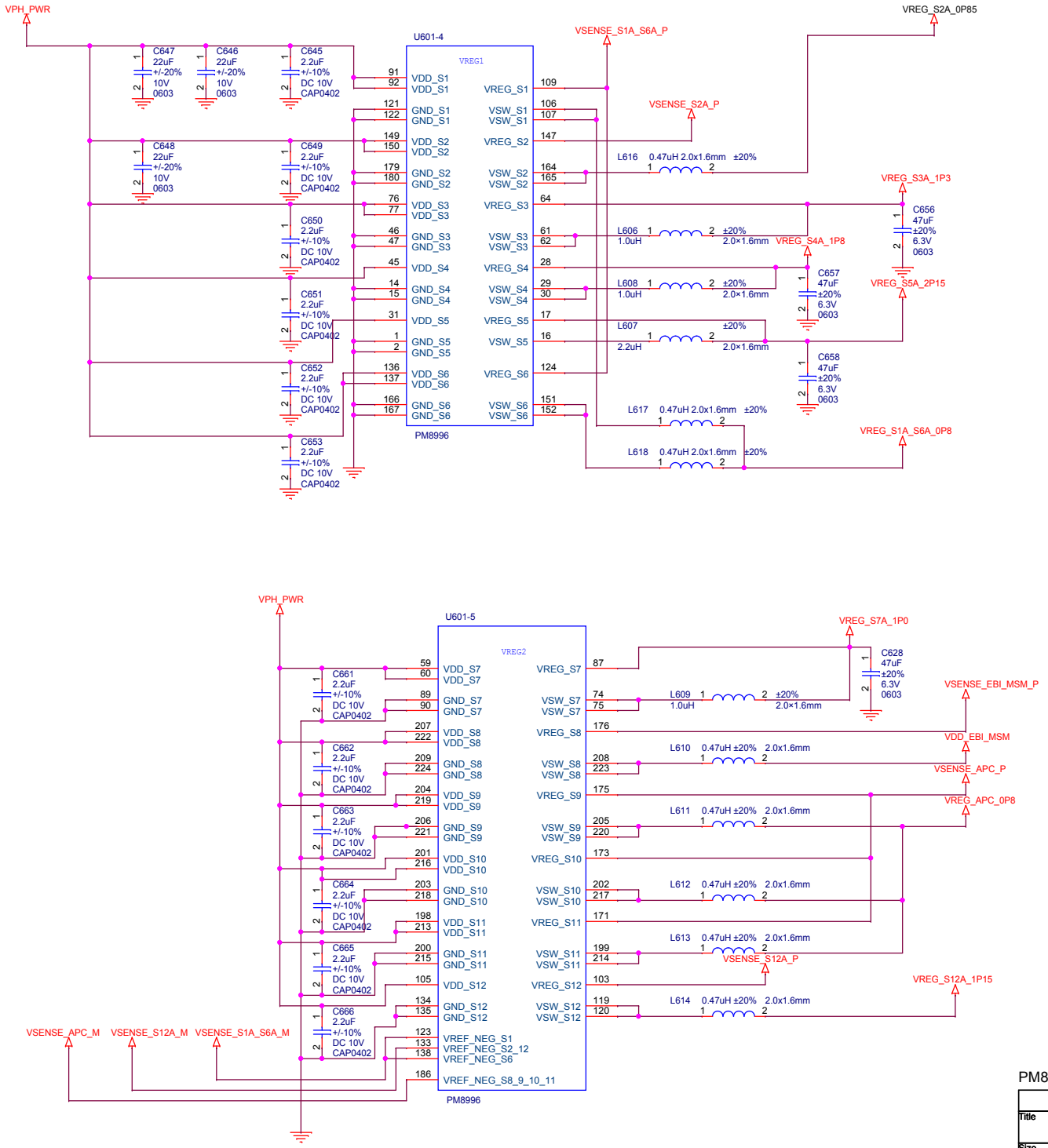

PM8996 VREG

Title	A1	
Size A3	Document Number <Doc>	Rev P0
Date: Thursday, June 30, 2016	Sheet 27 of 36	

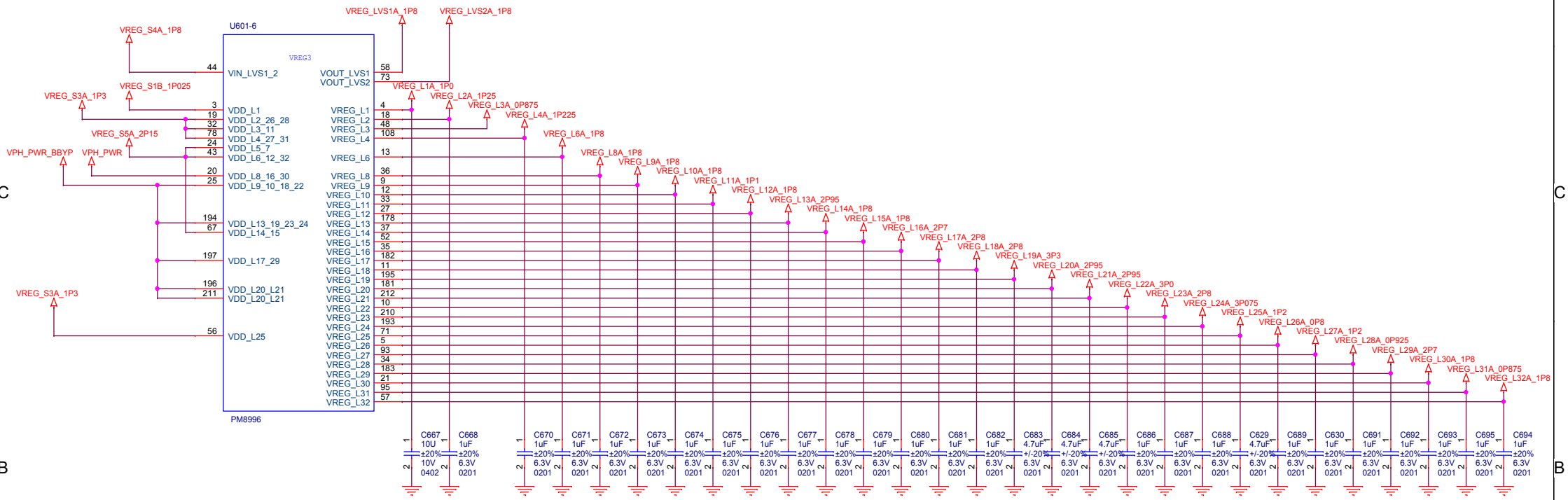

L1,L3,L26,L31MUST PLACE NEAR THE PMIC

PM8996 LDO

Title	A1	
Size A3	Document Number <Doc>	Rev P0
Date: Thursday, June 30, 2016	Sheet 28 of 36	

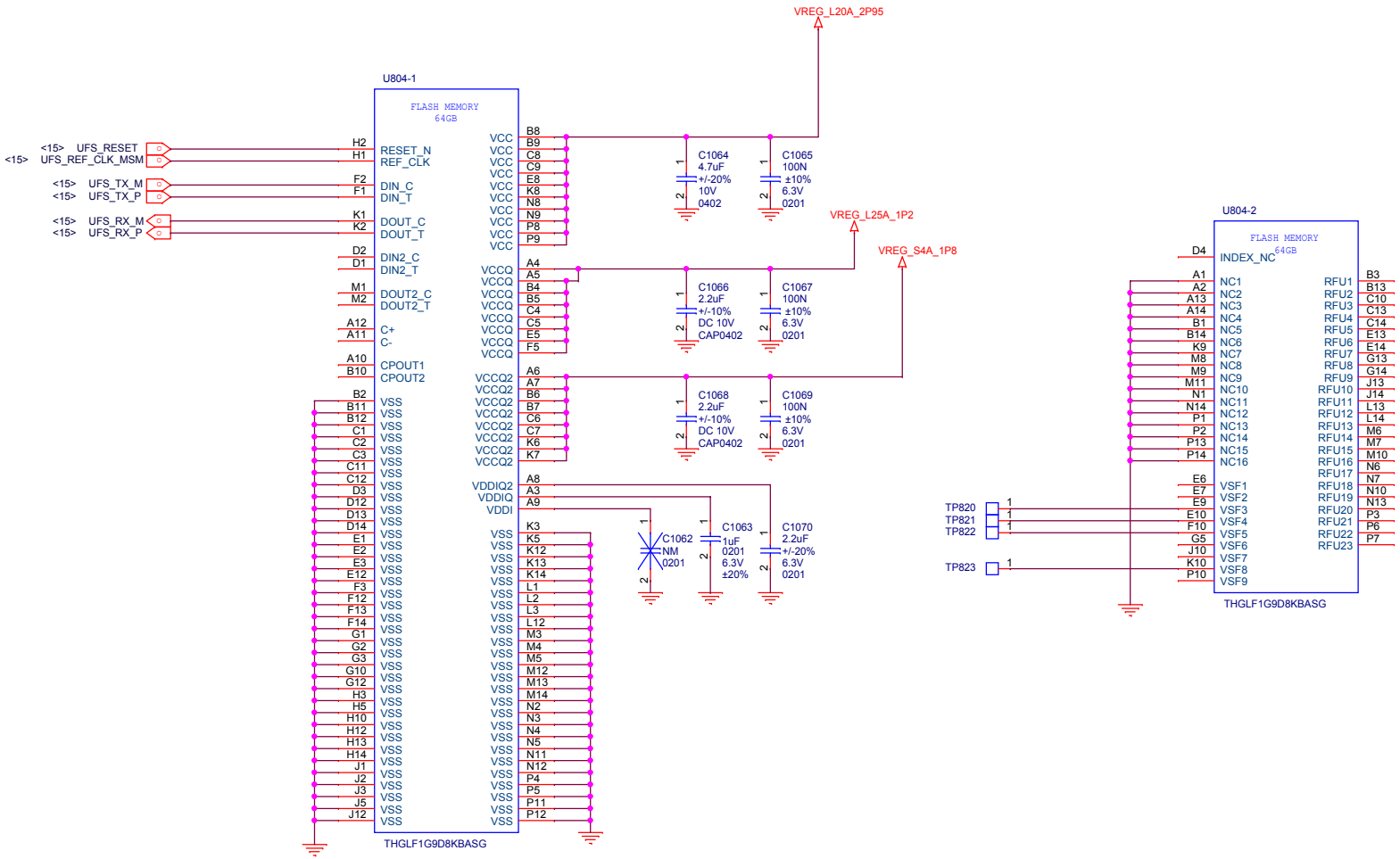

MEMORY UFS

Title	A1	
Size A3	Document Number <Doc>	Rev P0
Date: Thursday, June 30, 2016	Sheet 29 of 36	

HANDSET

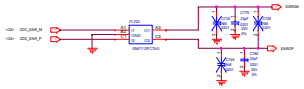

AUX Mic2

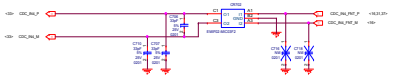

HEADSET

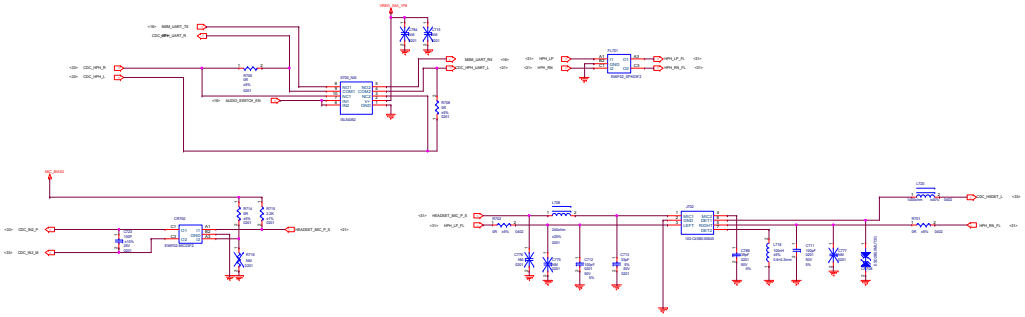

Speaker PA

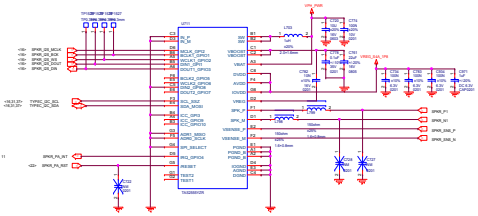

AUX Mic1

KEYPAD LED DRIVER

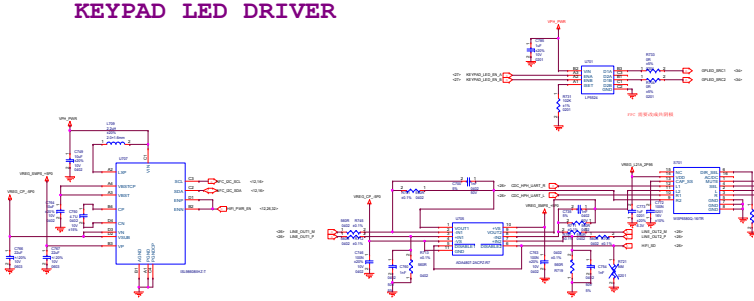

Bottom fpc Connector

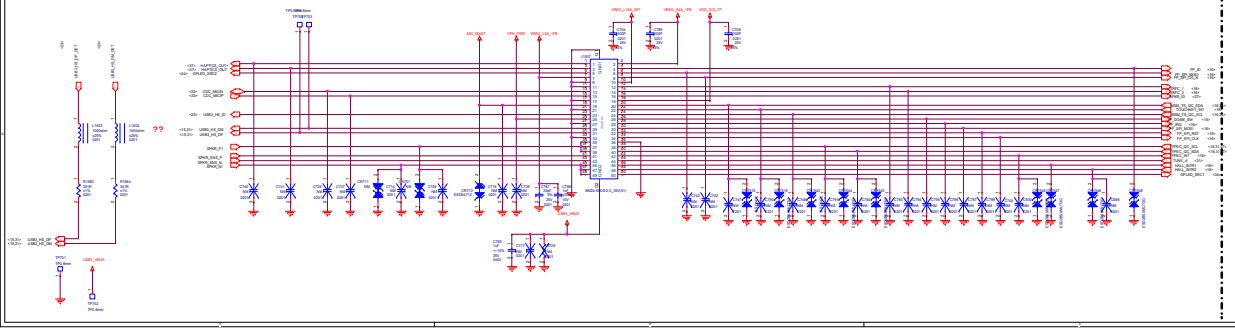

AUDIO

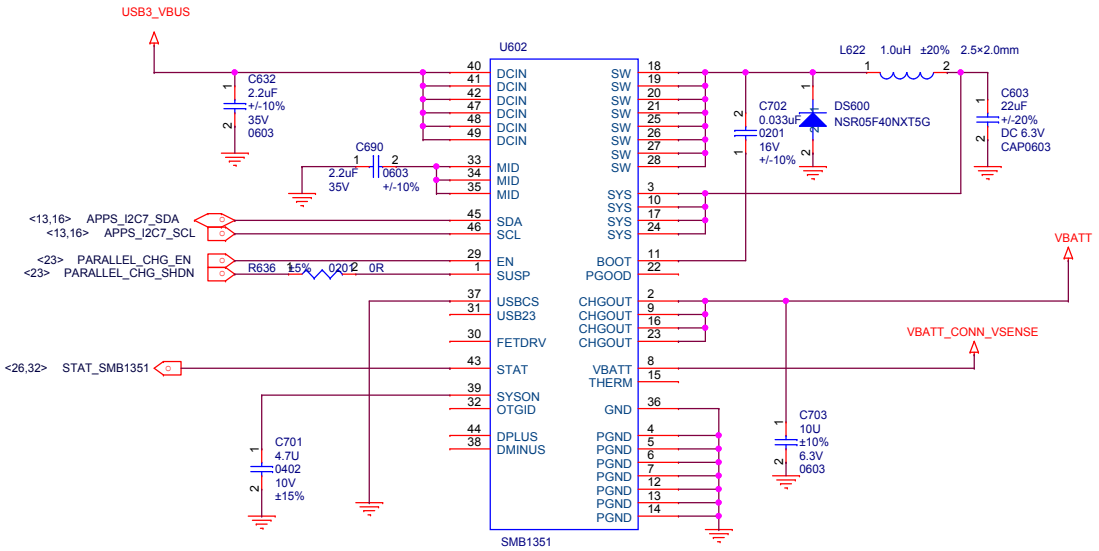

SMB1357 CHARGER

Title	A1	
Size A3	Document Number <Doc>	Rev P0
Date: Thursday, June 30, 2016	Sheet 31 of 36	

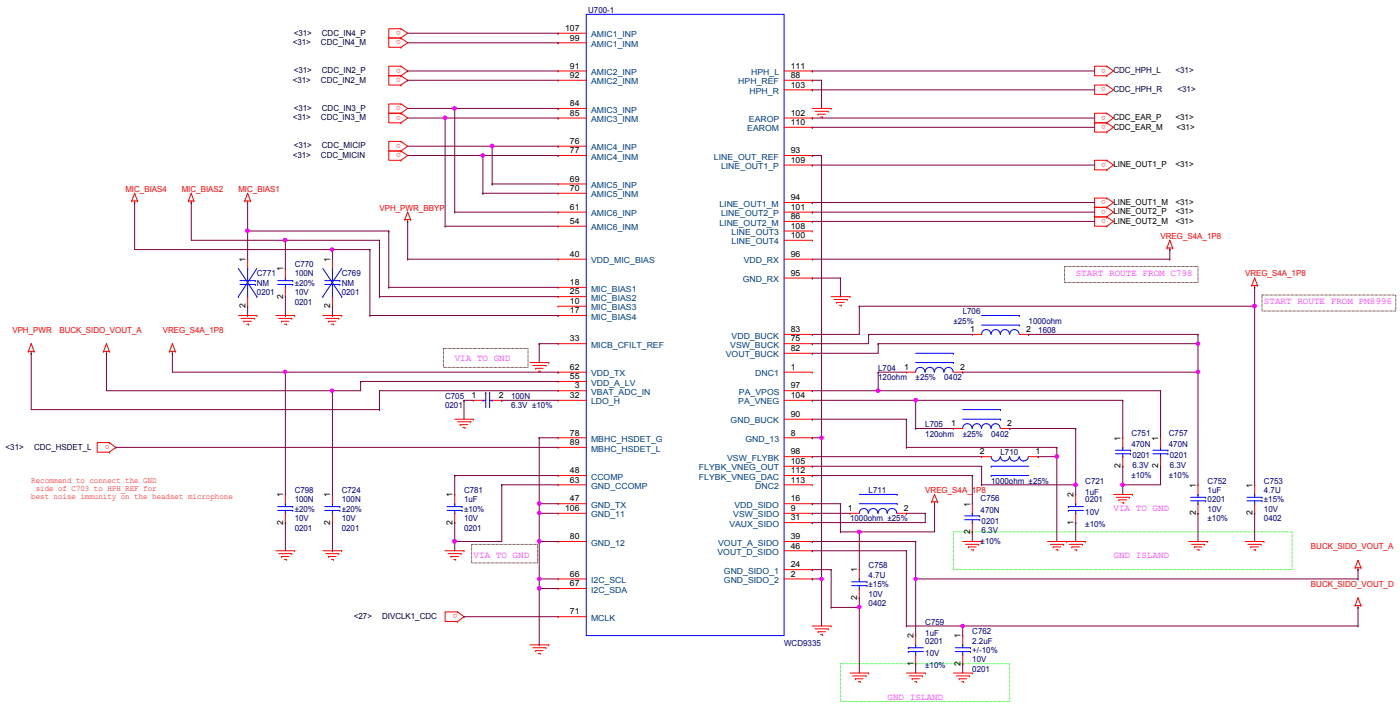

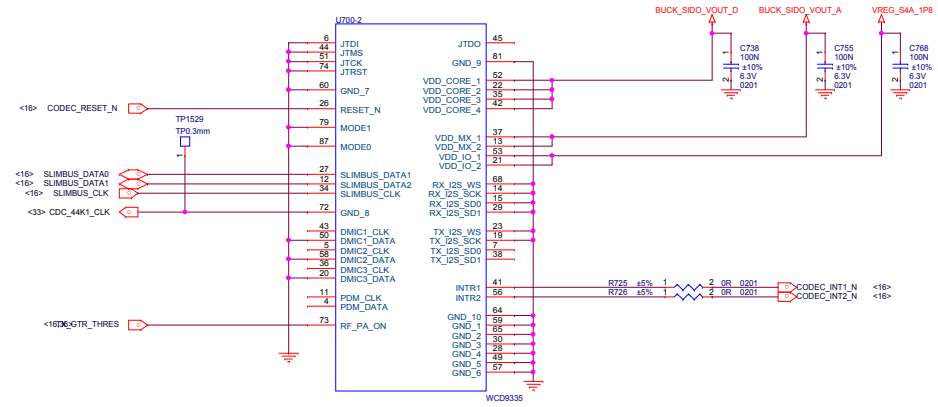

WCD9335

Title	A1	
Size A2	Document Number <Doc>	Rev P0
Date: Thursday, June 30, 2016	Sheet 32 of 36	

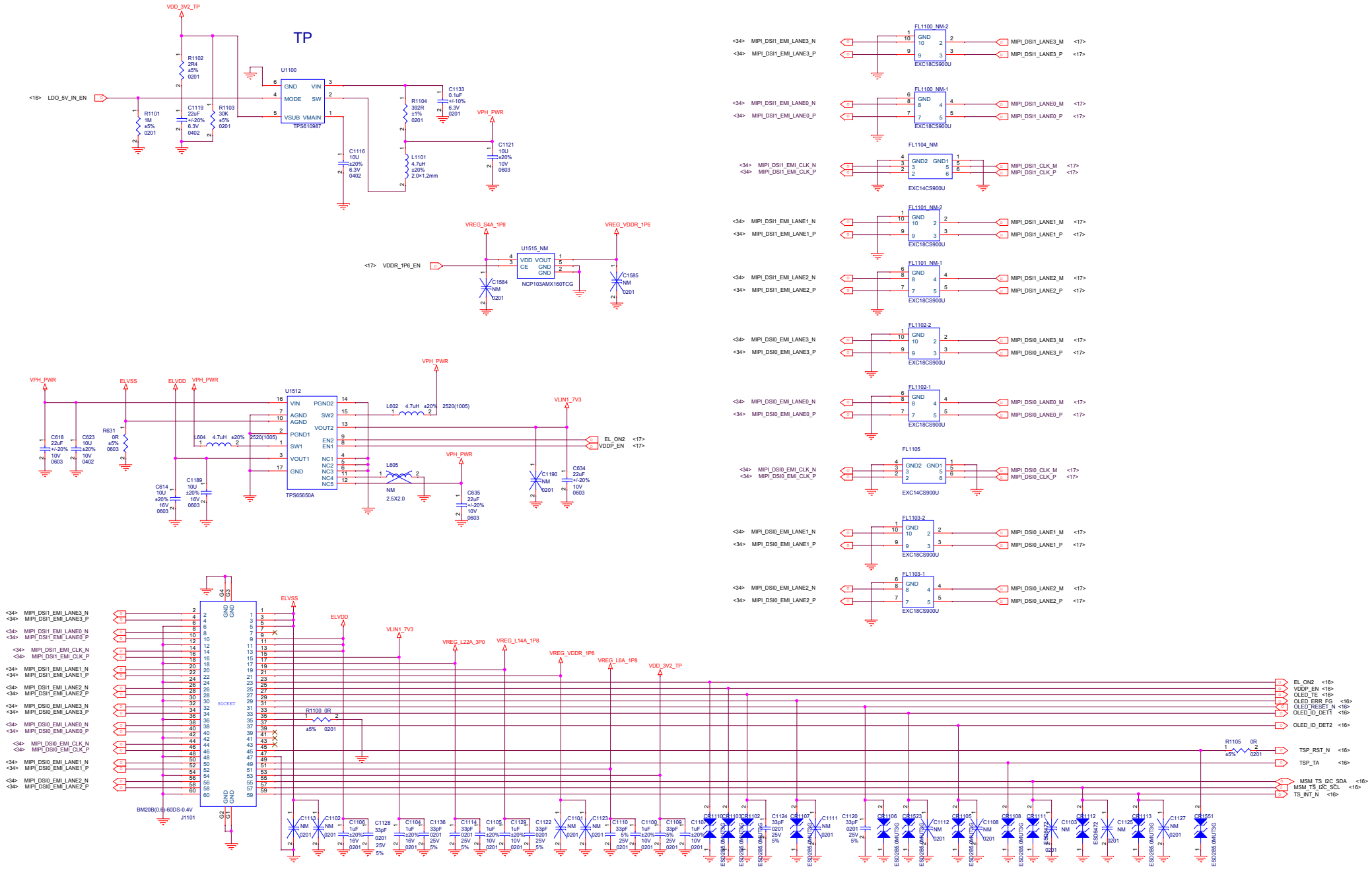

LCD

XIAO MI			
Title	A1		
Size A2	Document Number LCD		Rev P0
Date: Thursday, June 30, 2016	Sheet 33 of 36		

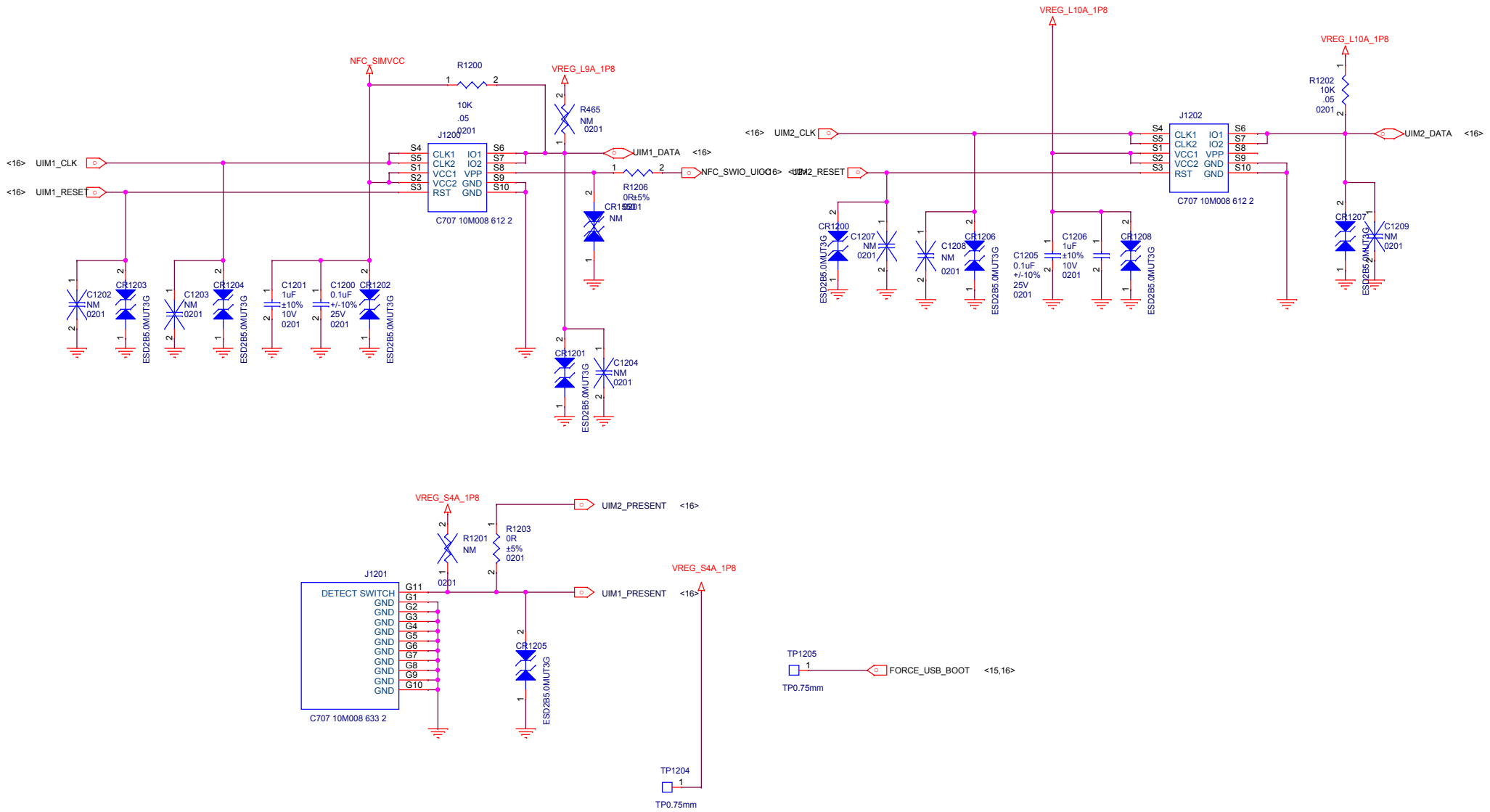

SIM CONNECTOR

XIAO MI		
Title A1		
Size A3	Document Number	Rev P0
Date:	Sheet 34 of 36	

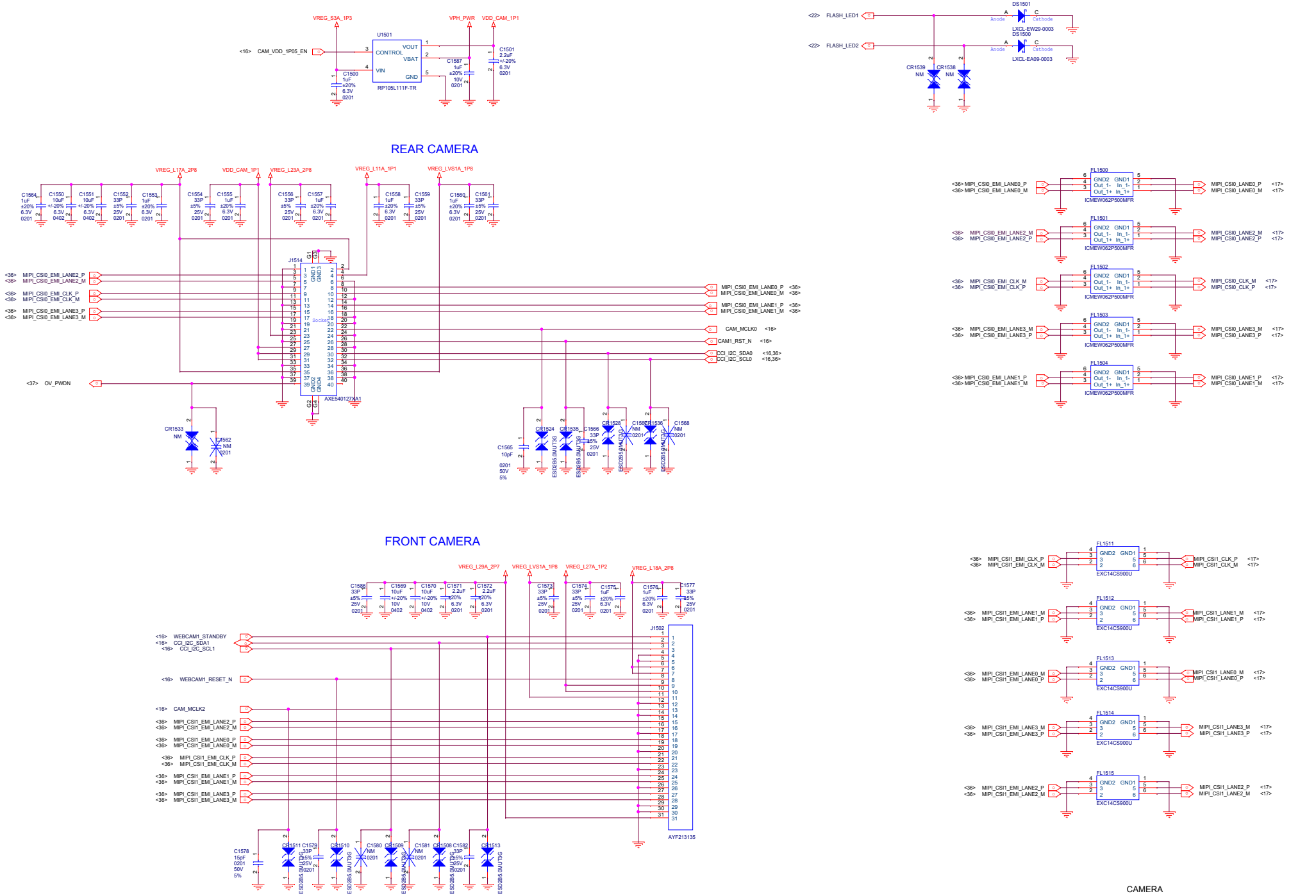
REAR CAMERA
FRONT CAMERA
U1501
RP105L111F-TR
<16> CAM_VDD_1P05_EN
VREG_S3A_1P3
VPH_PWR
VDD_CAM_1P1
DS1501
LXCL-EW29-0003
DS1500
LXCL-EA09-0003
<22> FLASH_LED1
<22> FLASH_LED2
J1514
AXE540127XA1
<37> OV_PWDN
CAM_MCLK0 <16>
CAM1_RST_N <16>
CCI_I2C_SDA0 <16,36>
CCI_I2C_SCL0 <16,36>
FL1500
FL1501
FL1502
FL1503
FL1504
ICMEW062P500MFR
J1502
AYF213135
<16> WEBCAM1_STANDBY
<16> CCI_I2C_SDA1
<16> CCI_I2C_SCL1
<16> WEBCAM1_RESET_N
<16> CAM_MCLK2
FL1511
FL1512
FL1513
FL1514
FL1515
EXC14CS900U
CAMERA
XIAO MI
Title
A1
Size
A2
Document Number
Rev
P0
Date:
Sheet 35 of 36

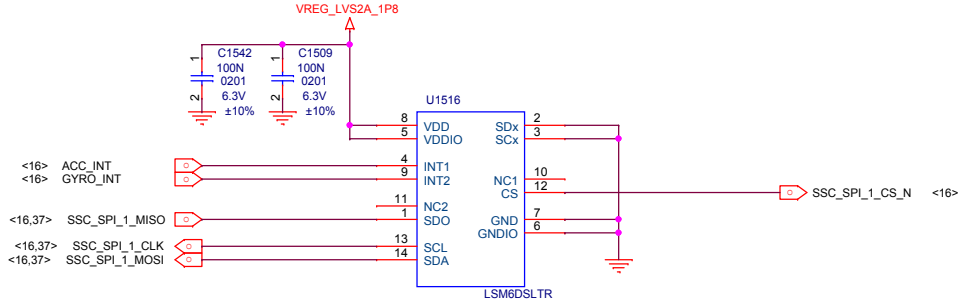

G+G

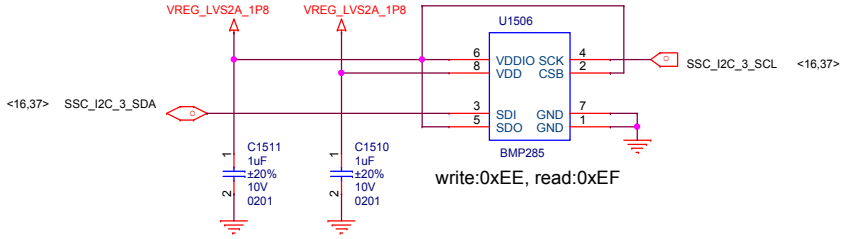

PRESSURE

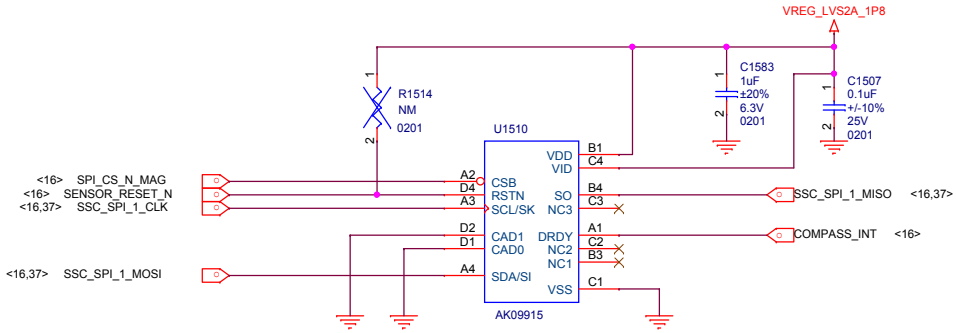

COMPASS

INFARED

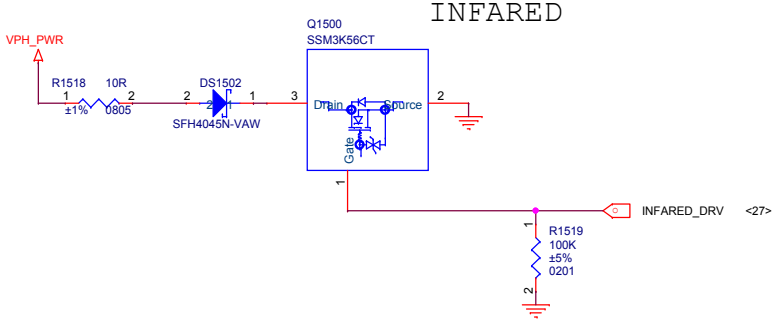

P-SENSOR

SENSOR

Title	A1	
Size A3	Document Number <Doc>	Rev P0
Date:	Sheet 36 of 36	